Instruction Sheet
PAX Expansion Tanks

SUPERSEDES: August 5, 2013 EFFECTIVE: July 30, 2014

1. Note location of the system connection, charging valve, coupling and the drain plug and labels on the tank. Refer to Diagram 1 for location of tank fittings.
2. Carefully remove the shipping plug in the system connection coupling located at the center of the cover flange. Pause before completely removing to allow any trapped air to escape. There should not be much, if any, air pressure under the protective cover.

   CAUTION: DO NOT REMOVE THE PIPE PLUGS LOCATED ON THE SIDE AND BOTTOM OF THE TANK (TANK DRAINS). THESE PLUGS SHOULD NEVER BE REMOVED UNLESS NECESSARY AND THEN ONLY AFTER THE AIR PRESSURE IN THE TANK HAS BEEN BLED OFF TO ZERO GAUGE PRESSURE. BEFORE BLEEDING OFF ANY OF THE AIR CHARGE, ALWAYS ISOLATE THE TANK FROM THE SYSTEM WITH A SHUT-OFF VALVE.
3. Prior to connecting this tank to the hydronic system the pre-charge pressure within the tank should be confirmed and if necessary adjusted to equal the minimum system pressure at the tank location. This measurement should be taken at the air valve located on the top of the tank. The tank was shipped from the factory with an initial pre-charge of 40 psi at 68 degrees. This may vary with changes in ambient temperature. Use Diagram 2 (below) - Air Charge Check Chart to correct the value read on the pressure gauge to adjust for changes in the ambient temperature. The fill pressure of the system should be indicated on the schedule file or within the job specifications. If not provided in either of these locations consult the design engineer for the proper fill pressure values prior to installation of this tank. Installation of the tank prior to adjusting the pre-charge can result in incorrect pre-charge readings.
4. The pipe connection to the system may now be made. The piping requirements for captive air tanks are different from those of plain steel expansion tanks. Note the PAX Tank Piping Diagrams. Piping and air elimination devices should be arranged so that air will not be trapped in the tank, above the tank or in the nozzle. Pitch the piping connection up away from the tank and use automatic air vents where necessary. Note the piping diagram.
5. Locate the PAX tank connection as close as possible to the suction side of the pump. This ensures that the pressures realized from the pump head will be additive in the system. A combination shut-off and drain valve should be located in the connection piping to provide for tank isolation during the initial hydrostatic test.

- Non NSF/ANSI 61-G units "Suitable for Vertical or Horizontal Installation"

NSF/ANSI 61-G **[P] Option**, (Example P/N PAX30-150P)

- ***For VERTICAL Installation ONLY***
- Models certified to NSF 61-G are required to be installed on the cold water side of the hot water heater.

SYSTEM CONNECTION	
PAX30 TO PAX500	¾" NPT

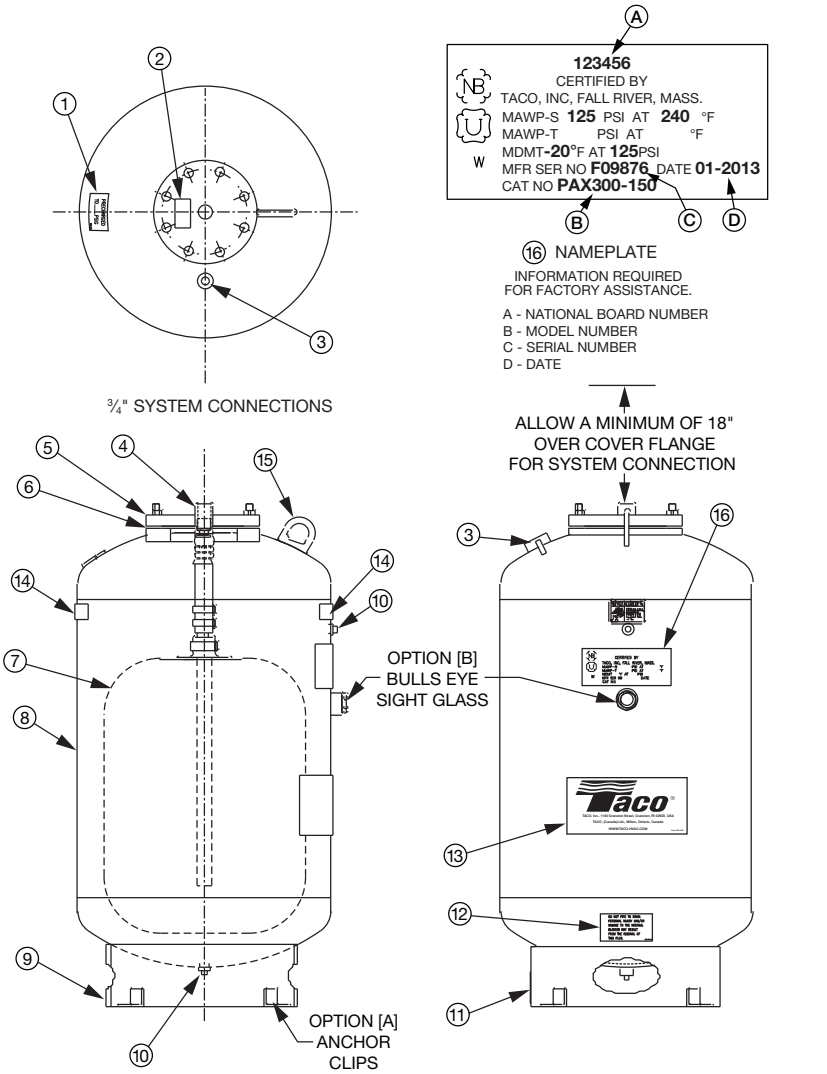

1 - Factory Precharged To 40 PSIG Label
2 - System Connection Label
3 - CHARGING VALVE CLOSURE (Schrader) 1½" NPT
4 - Shipping Cap, System Connection
5 - Cover Assembly
6 - Cover Gasket
7 - Hose & Bag Assembly
8 - Tank
9 - Base Ring
10 - Sealed ½" NPT at factory - Do Not Remove Plug - Removing plug voids tank Warranty. **Severe injury or death may result if a factory installed plug is removed without first isolating the tank from the system and reducing the internal pre-charge pressure to zero psi at the air valve.**
11 - This Installation Sheet
12 - Personal Injury and/or Damage Label
13 - Taco Label
14 - Warning Label
15 - Lug(s)
16 - ASME Name Plate

Diagram 1 – Location of Tank Fittings

Diagram 2 – Air Charge Check Chart

Specified Pre Charge Pressure P.S.I. (at 68ºF)	Ambient Temperature (ºF)								
	36	44	52	60	68	76	84	92	100
12	10.4	10.8	11.2	11.6	12.0	12.4	12.8	13.2	13.6
20	17.9	18.4	18.9	19.5	20.0	20.5	21.1	21.6	22.1
30	27.3	28.0	28.6	29.3	30.0	30.7	31.4	32.0	32.7
40	36.7	37.5	38.2	39.2	40.0	40.8	41.6	42.5	43.3
50	46.1	47.1	48.0	49.0	50.0	51.0	52.0	52.9	53.9
60	55.5	56.6	57.7	58.9	60.0	61.1	62.3	63.4	64.5
70	64.9	66.1	67.4	68.7	70.0	71.3	72.6	73.9	75.1

How to Use the Chart

1. Determine ambient air temperature where the tank is being checked.
2. Locate the specified pre-charge pressure in the left-hand column.
3. Follow across horizontally to the number under the ambient air temperature.
4. The number found under Step No. 3 is the temperature corrected air charge pressure in p.s.i. and should agree with the gauge reading observed at the tank.
5. If the temperature corrected air charge pressure differs by more than 1 p.s.i. from the pre-charge pressure specified for the system, then correct it by bleeding pressure through the air charge valve or by adding pressure with an air compressor.

PAX Expansion Tank Piping Diagrams

RECOMMENDED INSTALLATION FOR HEATING SYSTEM OR CHILLED WATER APPLICATIONS

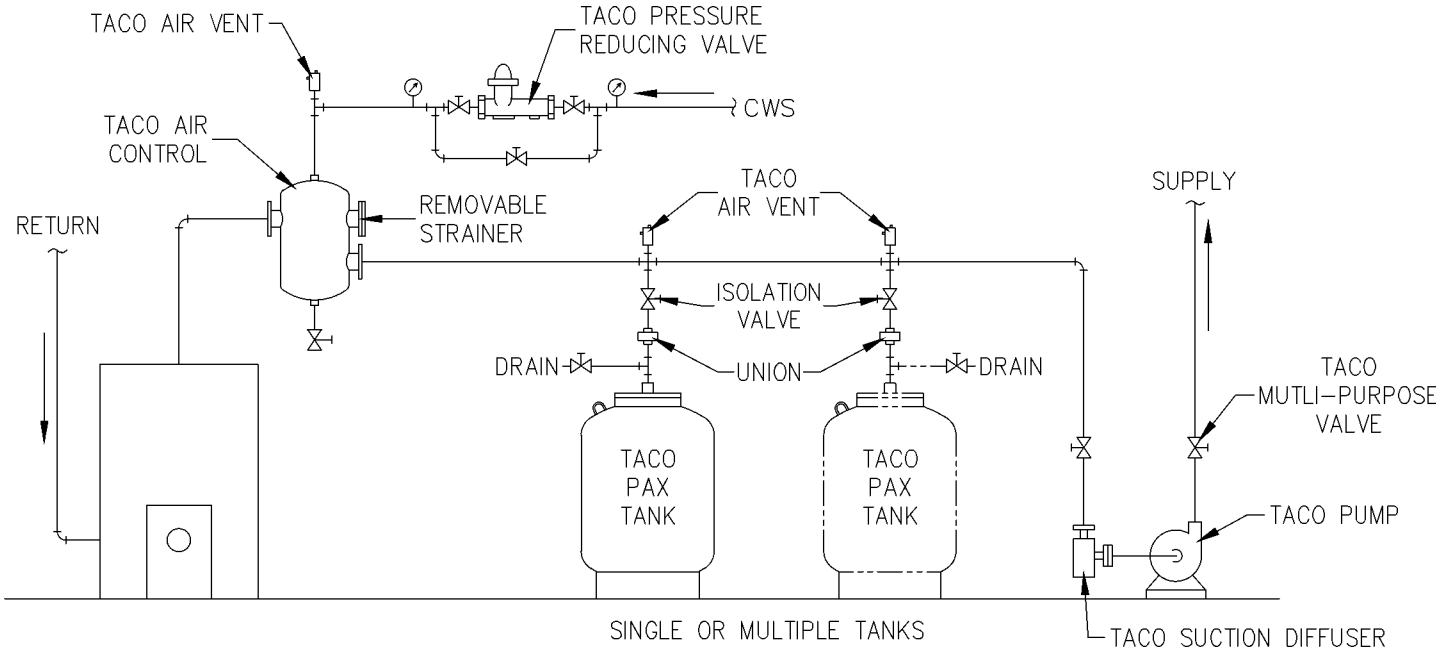

RECOMMENDED INSTALLATION FOR NSF/ANSI 61-G APPLICATIONS

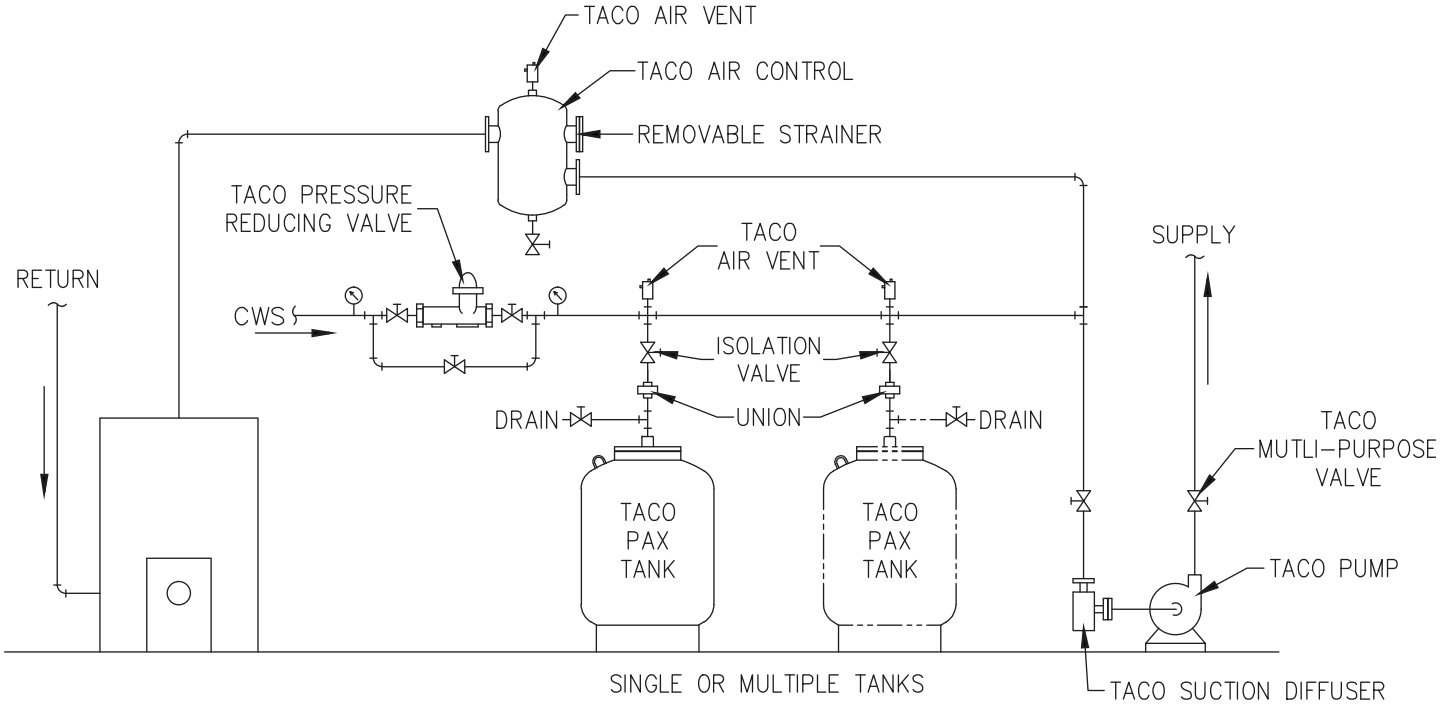

See Related Documents:

400-2.5	**Catalog**
402-100	**Instruction Sheet, This Document**
402-014	**Bag Replacement Instructions**
401-084	**Submittal**

Do it Once. Do it Right.®

TACO, INC., 1160 Cranston Street, Cranston, RI 02920 Telephone: (401) 942-8000 FAX: (401) 942-2360.
TACO (Canada), Ltd., 8450 Lawson Road, Unit #3, Milton, Ontario L9T 0J8. Telephone: 905/564-9422. FAX: 905/564-9436.
Visit our web site at: http://www.taco-hvac.com

Printed in USA
Copyright 2014
TACO, Inc.