Submittal Data Information

"4900" Series Air/Dirt Separators

401-138

SUPERSEDES : November 1, 2012 EFFECTIVE: December 31, 2012

JOB _____ ENGINEER _____ CONTRACTOR _____ REP. _____

ITEM NO.	LOCATION	MODEL NO.	QUANTITY	GPM

SPECIFICATIONS

- Designed and constructed per ASME Code Section VIII Div. 1
- Registered with the National Board of Pressure Vessel Manufacturers
- Standard Design Pressure and Temperature: 125 psi @ 240°F
- Particle removal down to 5 microns
- Construction: Carbon Steel with exterior red oxide primer finish
- 304 Stainless Steel Coalescence Pall Rings

FACTORY INSTALLED

- Air Vent
- Blowdown Valve
- Flush Valve
  - ❑ 125 psi @ 240°F, Standard

OPTIONS

- Higher Design Pressures and Temperatures
  - ❑ 150 psi @ 240°F, Available
- Optional System Connection Sizes available
- Optional Connection Types
  - ❑ 'T' Female NPT Threaded 2", 2½" & 3" only
  - ❑ 'G' Grooved Pipe Connections
- Optional Base Ring
  - ❑ Add Suffix 'R' (4905 thru 4916)

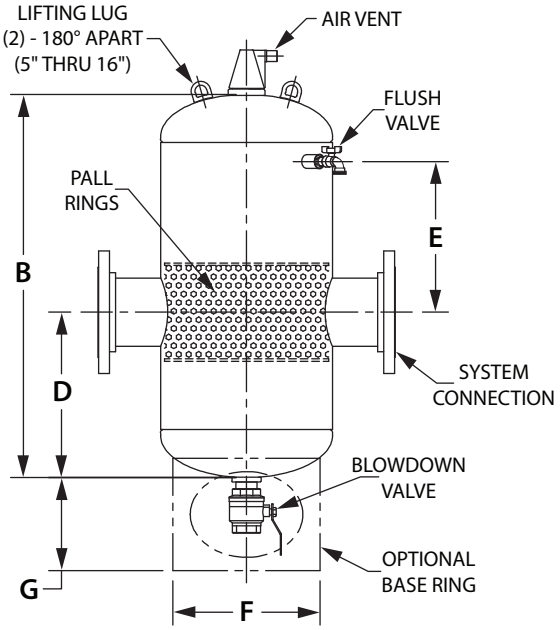

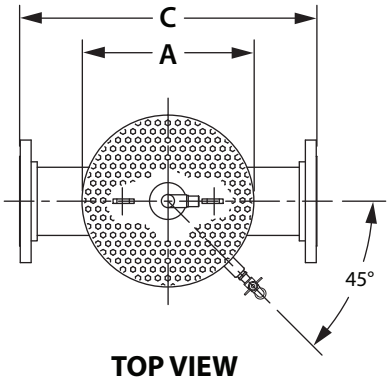

SIZES & DIMENSIONS

All dimensions shown are subject to change and should not be used for prepiping.
Contact your local Taco representative should certified dimensional drawings be required.

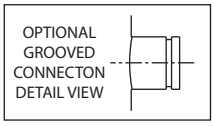

PIPE SIZE	MODEL NUMBER (1)	A DIA. (INCH)	B MAX. (INCH)	C (INCH)	D (INCH)	E (INCH)	F DIA. (INCH)	G (INCH)	SURFACE AREA (SQ. FT.) (2)	OPTIMUM FLOW (GPM)	APPROX. DRY WGT. (LBS)
2	4902ADT-125	10	16½	12 *	7½	3⅞	–	–	12.7	51	30
2	4902AD-125	10	16½	20	7½	3⅞	–	–	12.7	51	45
2½	49025ADT-125	10	16½	12 *	7½	3⅞	–	–	12.7	73	40
2½	49025AD-125	10	16½	20	7½	3⅞	–	–	12.7	73	50
3	4903ADT-125	12	25⅛	14½ *	11½	7½	–	–	22	113	75
3	4903AD-125	12	25⅛	22	11½	7½	–	–	22	113	85
4	4904AD-125	12	25⅛	22	11½	7½	–	–	22	204	90
5	4905AD-125	14	33⅝	24	15¾	12	13½	12⅜	36.8	306	230
6	4906AD-125	14	33⅝	24	15¾	12	13½	12⅜	36.8	469	245
8	4908AD-125	18	41½	28	18⅛	16	17½	12⅝	77.2	816	325
10	4910AD-125	24	56¼	36	25⅜	22	20	12⅞	132.8	1291	615
12	4912AD-125	24	63¼	36	26⅜	28	20	12⅞	147.2	1837	695
14	4914AD-125	30	73	42	33	29½	24	13¾	293.5	2106	1000
16	4916AD-125	30	79¾	42	34	35¼	24	13¾	330.3	2790	1055

(1) For 150 psi models, replace - 125 with -150. * Dimension for 'T' option only. (2) Coalescence (Pall Ring) Surface Area.

Comments: _____

Do it Once. Do it Right.®

TACO, INC., 1160 Cranston Street, Cranston, RI 02920 Telephone: (401) 942-8000 FAX: (401) 942-2360.
TACO (Canada), Ltd., 8450 Lawson Road, Unit #3, Milton, Ontario L9T 0J8. Telephone: 905/564-9422. FAX: 905/564-9436.
Visit our web site at: http://www.taco-hvac.com

Printed in USA
Copyright 2012
TACO, Inc.