Submittal Data Information

"4900" Series Air Separators

401-137

SUPERSEDES : December 31, 2012 EFFECTIVE: March 1, 2013

JOB _____ ENGINEER _____ CONTRACTOR _____ REP. _____

ITEM NO.	LOCATION	MODEL NO.	QUANTITY	GPM

SPECIFICATIONS

- Designed and constructed per ASME Code Section VIII Div. 1
- Registered with the National Board of Pressure Vessel Manufacturers
- Standard Design Pressure and Temperature: 125 psi @ 240°F
- Construction: Carbon Steel with exterior red oxide primer finish
- 304 Stainless Steel Coalescence Pall Rings

FACTORY INSTALLED

- Air Vent
- Flush Valve
  - ❑ 125 psi @ 240°F, Standard

OPTIONS

- Higher Design Pressures and Temperatures
  - ❑ 150 psi @ 240°F, Available
- Optional System Connection Sizes available
- Optional Connection Types
  - ❑ 'T' Female NPT Threaded 2", 2½" & 3" only
  - ❑ 'G' Grooved Pipe Connections
- Optional Base Ring
  - ❑ Add Suffix 'R' (4905 thru 4916)

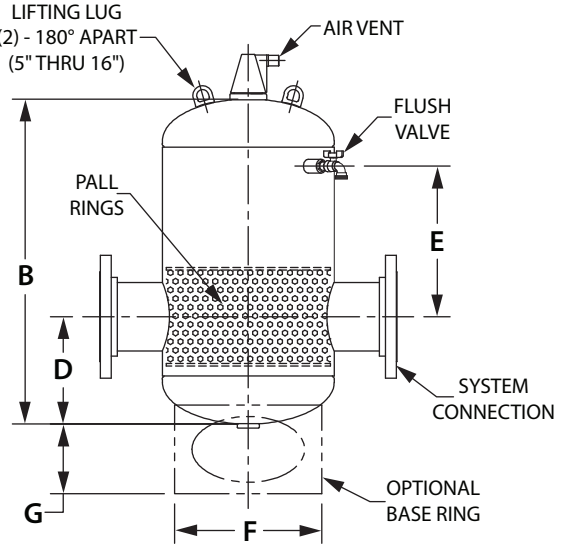

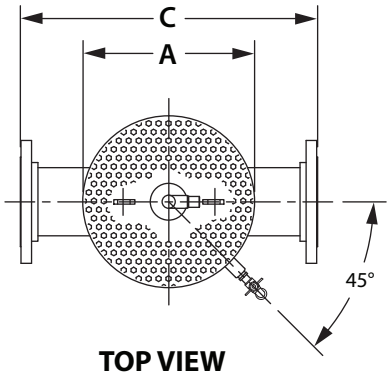

TOP VIEW

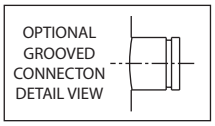

SIZES & DIMENSIONS

All dimensions shown are subject to change and should not be used for prepiping.
Contact your local Taco representative should certified dimensional drawings be required.

PIPE SIZE	MODEL NUMBER (1)	A DIA. (INCH)	B MAX. (INCH)	C (INCH)	D (INCH)	E (INCH)	F DIA. (INCH)	G (INCH)	SURFACE AREA (SQ. FT.) (2)	OPTIMUM FLOW (GPM)	APPROX. DRY WGT. (LBS)
2	4902AT-125	10	16½	12* *	7½	3⅞	–	–	12.7	51	30
2	4902A-125	10	16½	20	7½	3⅞	–	–	12.7	51	45
2½	49025AT-125	10	16½	12* *	7½	3⅞	–	–	12.7	73	40
2½	49025A-125	10	16½	20	7½	3⅞	–	–	12.7	73	50
3	4903AT-125	12	22⅛	14½ *	8½	7½	–	–	22	113	65
3	4903A-125	12	22⅛	22	8½	7½	–	–	22	113	75
4	4904A-125	12	22⅛	22	8½	7½	–	–	22	204	80
5	4905A-125	14	28⅜	24	10½	12	12	6¾	36.8	306	200
6	4906A-125	14	28⅜	24	10½	12	12	6¾	36.8	469	215
8	4908A-125	18	36⅝	28	13¼	16	14	7	77.2	816	290
10	4910A-125	24	47¾	36	16⅞	22	20	6¾	132.8	1291	565
12	4912A-125	24	54¾	36	17⅞	28	20	6¾	147.2	1837	645
14	4914A-125	30	62	42	22	29½	24	8	293.5	2106	910
16	4916A-125	30	67¾	42	22	35¼	24	8	330.3	2790	965

(1) For 150 psi models, replace - 125 with -150. * Dimension for 'T' option only. (2) Coalescence (Pall Ring) Surface Area.

Comments: _____

Do it Once. Do it Right.®

TACO, INC., 1160 Cranston Street, Cranston, RI 02920 Telephone: (401) 942-8000 FAX: (401) 942-2360.
TACO (Canada), Ltd., 8450 Lawson Road, Unit #3, Milton, Ontario L9T 0J8. Telephone: 905/564-9422. FAX: 905/564-9436.
Visit our web site at: http://www.taco-hvac.com

Printed in USA
Copyright 2013
TACO, Inc.