Submittal Data Information

"4900" Series Hi-Velocity Air Separators

401-136

SUPERSEDES : December 31, 2012 EFFECTIVE: March 1, 2013

JOB _____ ENGINEER _____ CONTRACTOR _____ REP. _____

ITEM NO.	LOCATION	MODEL NO.	QUANTITY	GPM

SPECIFICATIONS

- Designed and constructed per ASME Code Section VIII Div. 1
- Registered with the National Board of Pressure Vessel Manufacturers
- Standard Design Pressure and Temperature: 125 psi @ 240°F
- Construction: Carbon Steel with exterior red oxide primer finish
- 304 Stainless Steel Coalescence Pall Rings

FACTORY INSTALLED

- Air Vent
- Flush Valve
  - ❑ 125 psi @ 240°F, Standard

OPTIONS

- Higher Design Pressures and Temperatures
  - ❑ 150 psi @ 240°F, Available
- Optional System Connection Sizes available
- Optional Connection Types
  - ❑ 'T' Female NPT Threaded 2", 2½" & 3" only
  - ❑ 'G' Grooved Pipe Connections
- Optional Base Ring
  - ❑ Add Suffix 'R' (4905 thru 4916)

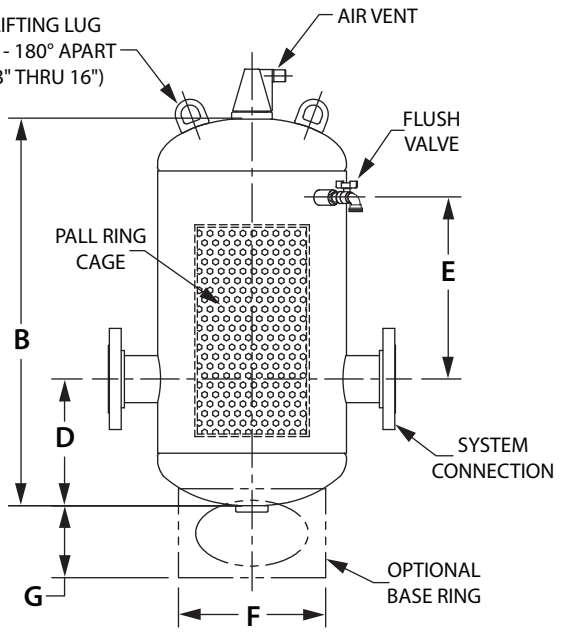

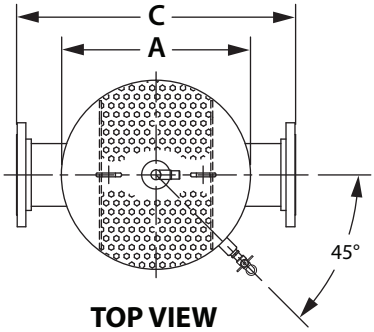

SIZES & DIMENSIONS

All dimensions shown are subject to change and should not be used for prepiping.
Contact your local Taco representative should certified dimensional drawings be required.

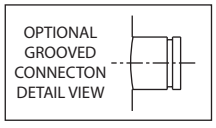

PIPE SIZE	MODEL NUMBER (1)	A DIA. (INCH)	B MAX. (INCH)	C (INCH)	D (INCH)	E (INCH)	F DIA. (INCH)	G (INCH)	SURFACE AREA (SQ. FT.) (2)	OPTIMUM FLOW (GPM)	APPROX. DRY WGT. (LBS)
2	4902AH-125	12	25	22	10	9	–	–	40	110	85
2½	49025AH-125	12	25	22	10	9	–	–	40	165	90
3	4903AH-125	14	28½	24	10	12¾	–	–	53	251	100
4	4904AH-125	14	28½	24	10	12¾	–	–	53	434	110
5	4905AH-125	20	40	30	14¼	14	16	6¾	110	687	190
6	4906AH-125	20	40	30	14¼	14	16	6¾	110	991	205
8	4908AH-125	24	47½	34	16⅞	21¾	20	7	191	1716	430
10	4910AH-125	30	59½	42	20½	28½	24	8	305	2700	600
12	4912AH-125	30	59½	42	20½	28½	24	8	305	3833	650
14	4914AH-125	36	72	48	24	32	30	7⅞	545	4625	940
16	4916AH-125	36	72	48	24	32	30	7⅞	545	6041	965

(1) For 150 psi models, replace - 125 with -150.

(2) Coalescence (Pall Ring) Surface Area.

Comments: _____

Do it Once. Do it Right.®

TACO, INC., 1160 Cranston Street, Cranston, RI 02920 Telephone: (401) 942-8000 FAX: (401) 942-2360.
TACO (Canada), Ltd., 8450 Lawson Road, Unit #3, Milton, Ontario L9T 0J8. Telephone: 905/564-9422. FAX: 905/564-9436.

Visit our web site at: http://www.taco-hvac.com

Printed in USA
Copyright 2013
TACO, Inc.