Submittal Data Information

401-135

"4900" Series Hi-Velocity Air/Dirt Separators

SUPERSEDES : November 1, 2012 EFFECTIVE: December 31, 2012

JOB _____ ENGINEER _____ CONTRACTOR _____ REP. _____

ITEM NO.	LOCATION	MODEL NO.	QUANTITY	GPM

SPECIFICATIONS

- Designed and constructed per ASME Code Section VIII Div. 1
- Registered with the National Board of Pressure Vessel Manufacturers
- Standard Design Pressure and Temperature: 125 psi @ 240°F
- Particle removal down to 5 microns
- Construction: Carbon Steel with exterior red oxide primer finish
- 304 Stainless Steel Coalescence Pall Rings

FACTORY INSTALLED

- Air Vent
- Blowdown Valve
- Flush Valve
  - ❑ 125 psi @ 240°F, Standard

OPTIONS

- Higher Design Pressures and Temperatures
  - ❑ 150 psi @ 240°F, Available
- Optional System Connection Sizes available
- Optional Connection Types
  - ❑ 'T' Female NPT Threaded 2", 2½" & 3" only
  - ❑ 'G' Grooved Pipe Connections
- Optional Base Ring
  - ❑ Add Suffix 'R' (4905 thru 4916)

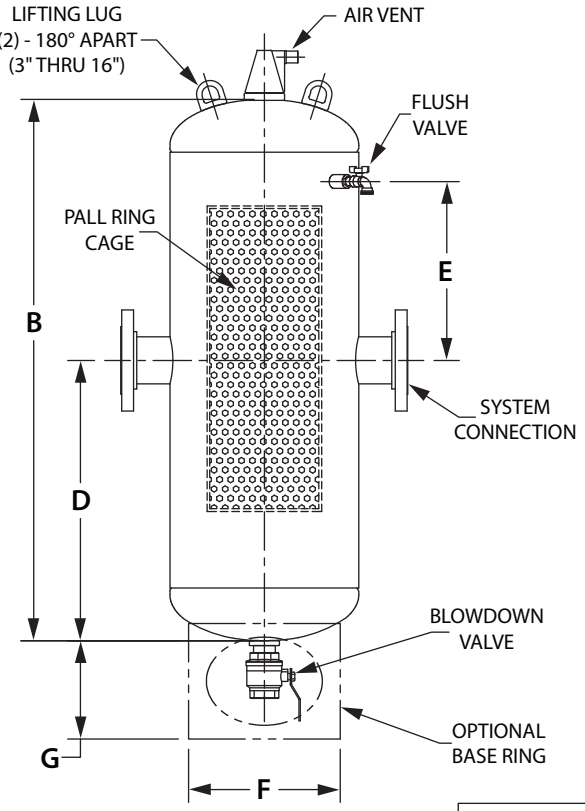

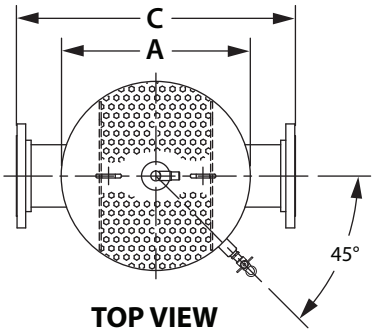

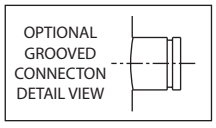

SIZES & DIMENSIONS

All dimensions shown are subject to change and should not be used for prepiping.
Contact your local Taco representative should certified dimensional drawings be required.

PIPE SIZE	MODEL NUMBER (1)	A DIA. (INCH)	B MAX. (INCH)	C (INCH)	D (INCH)	E (INCH)	F DIA. (INCH)	G (INCH)	SURFACE AREA (SQ. FT.) (2)	OPTIMUM FLOW (GPM)	APPROX. DRY WGT. (LBS)
2	4902ADH-125	12	32	22	12	10	–	–	64	110	100
2½	49025ADH-125	12	32	22	12	10	–	–	64	165	105
3	4903ADH-125	14	40¼	24	16¼	14¼	–	–	82	251	120
4	4904ADH-125	14	40¼	24	16¼	14¼	–	–	82	434	130
5	4905ADH-125	20	57½	30	23	21	18	13	165	687	255
6	4906ADH-125	20	57½	30	23	21	18	13	165	991	270
8	4908ADH-125	24	69¼	34	27¾	25¾	20	13¼	290	1716	520
10	4910ADH-125	30	86	42	34½	32½	24	13¾	456	2700	735
12	4912ADH-125	30	86	42	34½	32½	24	13¾	456	3833	785
14	4914ADH-125	36	103	48	41½	39½	30	13⅝	800	4625	1100
16	4916ADH-125	36	103	48	41½	39½	30	13⅝	800	6041	1125

(1) For 150 psi models, replace - 125 with -150.

(2) Coalescence (Pall Ring) Surface Area.

Comments: _____

Do it Once. Do it Right.®

TACO, INC., 1160 Cranston Street, Cranston, RI 02920 Telephone: (401) 942-8000 FAX: (401) 942-2360.
TACO (Canada), Ltd., 8450 Lawson Road, Unit #3, Milton, Ontario L9T 0J8. Telephone: 905/564-9422. FAX: 905/564-9436.

Visit our web site at: http://www.taco-hvac.com

Printed in USA
Copyright 2012
TACO, Inc.