Submittal Data Information

'4900' Series Dirt Separators

401-109

EFFECTIVE: OCTOBER 1, 2011 SUPERSEDES: NEW

JOB _____ ENGINEER _____ CONTRACTOR _____ REP. _____

ITEM	QUANTITY	MODEL NUMBER	SIZE

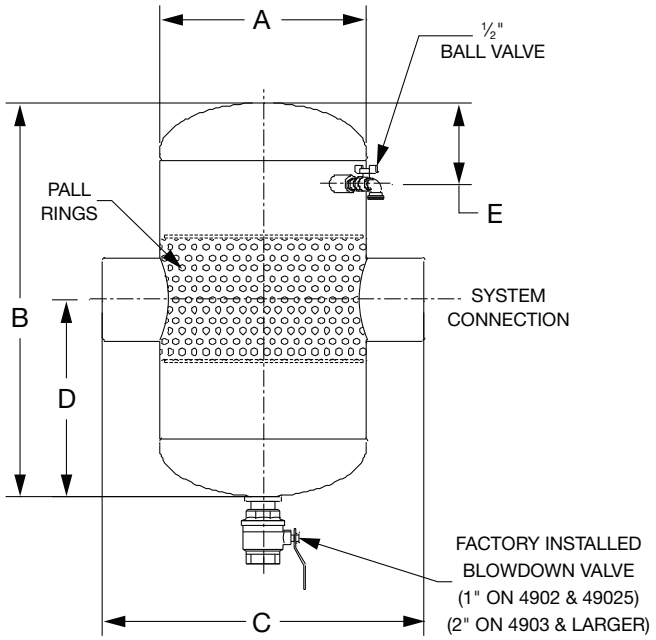

THREADED CONNECTIONS
4902DT THRU 4903DT

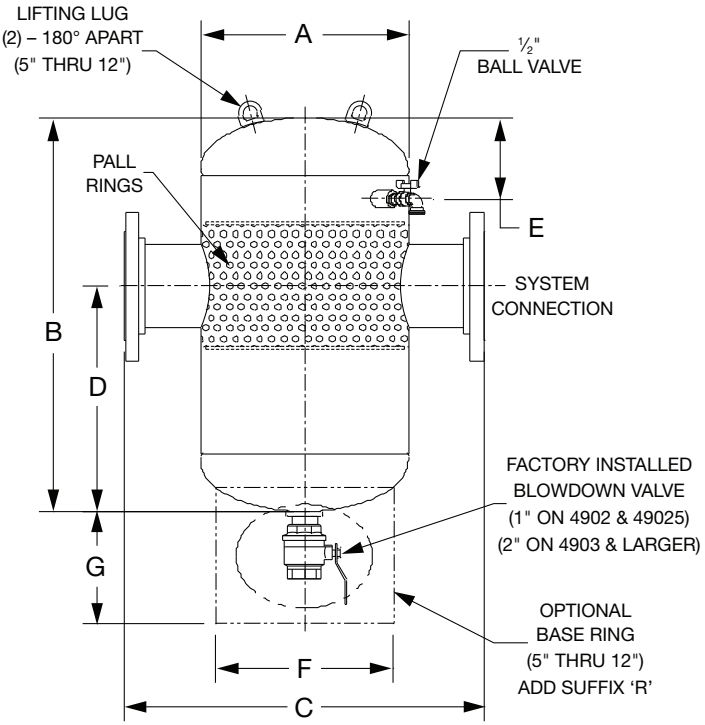

FLANGED CONNECTIONS
4902D THRU 4912D

WORKING PRESSURE: 125 PSI @ 270°F (150 PSI @ 270°F OPTION AVAILABLE)

PIPE SIZE	MODEL NUMBER	A DIA. (INCH)	B MAX. (INCH)	C (INCH)	D (INCH)	E (INCH)	F DIA. (INCH)	G (INCH)	SURFACE AREA* (SQ. FT.)	OPTIMUM FLOW (GPM)	APPROX. WGT. (LBS)
2	4902DT-125	10	16½	15	7½	5¼	—	—	12.7	51	30
2	4902D-125	10	16½	20	7½	5¼	—	—	12.7	51	35
2½	49025DT-125	10	16½	15	7½	5¼	—	—	12.7	73	40
2½	49025D-125	10	16½	20	7½	5¼	—	—	12.7	73	50
3	4903DT-125	12	21⅞	18½	11⅝	6	—	—	22	113	75
3	4903D-125	12	21⅞	22	11⅝	6	—	—	22	113	85
4	4904D-125	12	21⅞	22	11⅝	6	—	—	22	194	95
5	4905D-125	14	28⅝	24	15¾	6	13½	12⅜	36.8	306	125
6	4906D-125	14	28⅝	24	15¾	6	13½	12⅜	36.8	441	135
8	4908D-125	18	33⅞	28	18¼	7¼	17½	12⅝	77.2	764	215
10	4910D-125	24	45¼	36	25⅜	9	20	12⅞	132.8	1204	360
12	4912D-125	24	47	36	26⅜	9	20	12⅞	147.2	1709	400

* COALESCENCE (PALL RING) SURFACE AREA

Designed and constructed per ASME Section VIII Div. 1.

DO IT ONCE. DO IT RIGHT.®

TACO, INC., 1160 Cranston Street, Cranston, RI 02920 Telephone: (401) 942-8000 FAX: (401) 942-2360.
TACO (Canada), Ltd., 8450 Lawson Road, Unit #3, Milton, Ontario L9T 0J8. Telephone: 905/564-9422. FAX: 905/564-9436.
Visit our web site at: http://www.taco-hvac.com

Printed in USA
Copyright 2011
TACO, Inc.