Submittal Data Information

401-073R

"4900" Series Removable Cover, Air/Dirt Separator

EFFECTIVE: JULY 23, 2009 SUPERSEDES: SEPTEMBER 1, 2008

JOB _____ ENGINEER _____ CONTRACTOR _____ REP. _____

ITEM	QUANTITY	MODEL NUMBER	SIZE

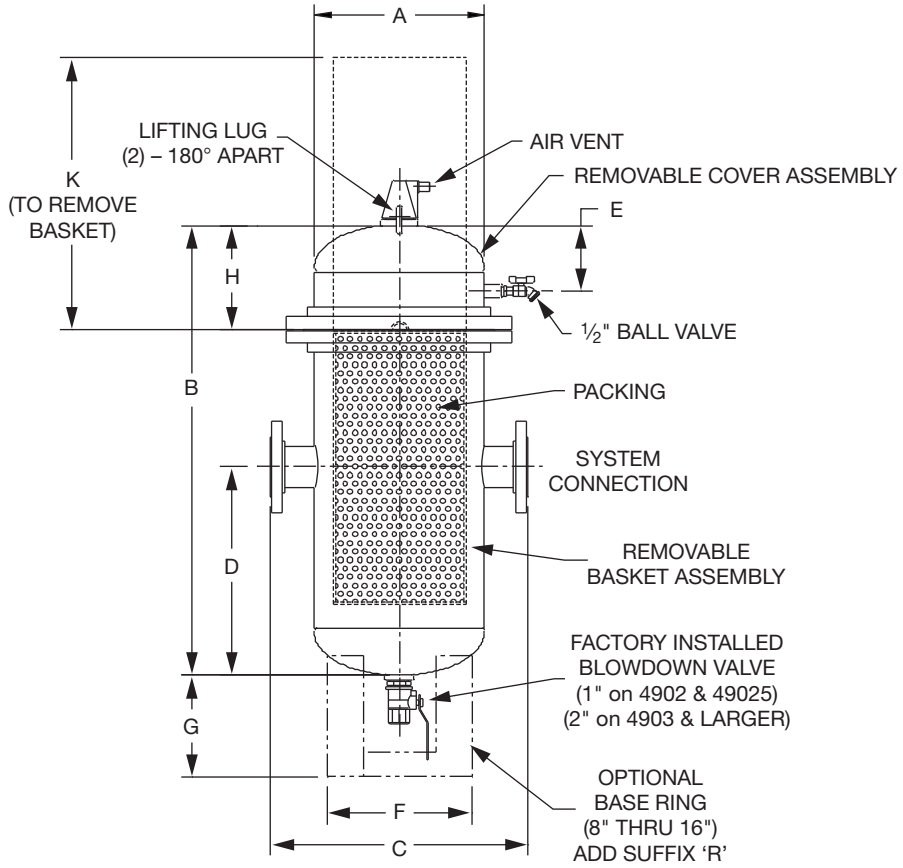

WORKING PRESSURE: 125 PSI @ 270°F (150 PSI @ 270°F OPTION AVAILABLE)

PIPE SIZE	MODEL NUMBER[1]	A DIA. (INCH)	B MAX. (INCH)	C (INCH)	D (INCH)	E (INCH)	F DIA. (INCH)	G (INCH)	H (INCH)	K (INCH)	SURFACE AREA[2] (SQ. FT.)	OPTIMUM FLOW (GPM)	APPROX. WGT. (LBS)
2	4902ADR-41	14	35 1/16	21 3/4	16 15/16	6	–	–	10	22	65.3	51	280
2½	49025ADR-41	14	35 1/16	21 3/8	16 15/16	6	–	–	10	22	65.3	73	285
3	4903ADR-42	14	42 9/16	21 1/4	20 13/16	6	–	–	10	26	79.3	113	300
4	4904ADR-42	14	42 9/16	24	20 13/16	6	–	–	10	26	79.3	194	310
5	4905ADR-42	14	46	24 1/4	26 1/2	6	–	–	10	29	57.2	306	430
6	4906ADR-42	14	46	23 3/8	26 1/2	6	–	–	10	29	57.2	441	440
8	4908ADR-42	18	50	28 3/8	24 3/16	7 1/4	17 1/2	12 1/2	12	28	89.7	764	630
10	4910ADR-42	24	56 7/8	35 1/8	25 3/8	8 7/8	20	13 3/16	15	35	159.8	1204	1155
12	4912ADR-42	24	63 3/8	36 3/8	26 3/8	8 7/8	20	13 3/16	15	41	193.3	1709	1180
14	4914ADR-42	30	73	43 3/8	33	10 1/2	24	13 9/16	17	45	332.2	2066	1550
16	4916ADR-42	30	79 13/16	44 1/2	34 1/8	10 1/2	24	13 9/16	17	52	390.9	2699	1580

[1] FOR 150 PSI MODEL NUMBERS, REPLACE -41 WITH -61 AND -42 WITH -62

[2] COALESCENCE (PALL RING) SURFACE AREA

Designed and constructed per ASME Section VIII Div. 1.

Do it Once. Do it Right.®

TACO, INC., 1160 Cranston Street, Cranston, RI 02920 Telephone: (401) 942-8000 FAX: (401) 942-2360.
TACO (Canada), Ltd., 8450 Lawson Road, Unit #3, Milton, Ontario L9T 0J8. Telephone: 905/564-9422. FAX: 905/564-9436.
Visit our web site at: http://www.taco-hvac.com

Printed in USA
Copyright 2009
TACO, Inc.