Replacement Parts List

304-455

MODELS TC/TS 141213, TC/TS 161217, TC/TS 161415

SUPERSEDES: August 20, 2012

EFFECTIVE: September 1, 2012

WHEN SELECTING AND ORDERING PARTS, ALWAYS REFER TO SERIAL NUMBER ON NAMEPLATE

00 00 00 00 0 0 0 0 0 0 0 0 0

- TC (SERIES)
- SUCTION SIZE
- DISCHARGE SIZE
- NOMINAL IMPELLER DIAMETER
- SEAL DESIGN
- MATERIAL OF CONSTRUCTION
- MOTOR FRAME SIZE
- FRAME STYLE
- MECHANICAL DESIGN
- BASE DESIGN
- BALL BEARINGS
- COUPLER OPTION
- SHIPPING/MANUFACTURING

CASING & IMPELLER PARTS

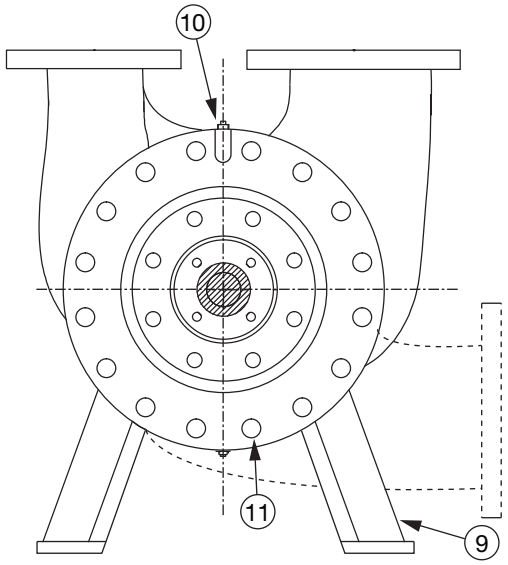

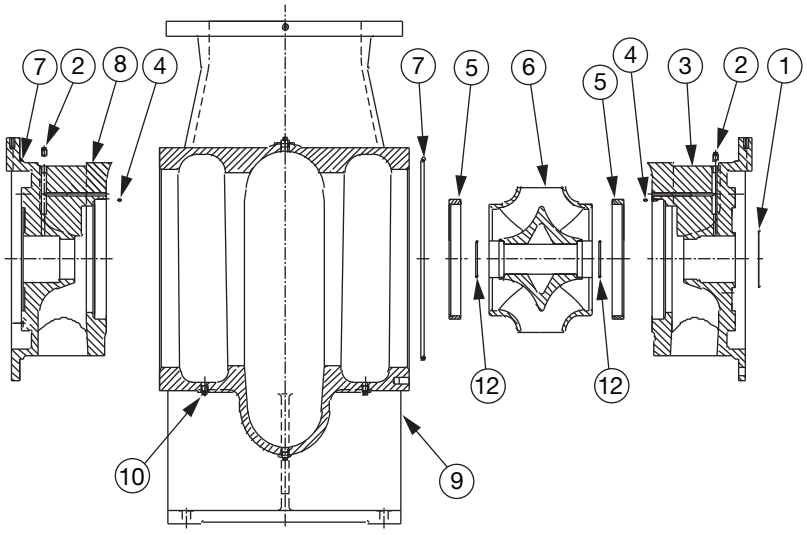

ITEM NO.	QTY. REQ.	DESCRIPTION	PART NUMBERS		
			PUMP MODEL 141213	PUMP MODEL 161217	PUMP MODEL 161415
1	2	O-RING, CASING COVER/SEAL COVER	955-1685RP	955-1686RP	
2	2	DRAIN PLUG, COVER	1/4"		
3	1	COVER B, DRIVE END	955-1595RP	955-1596RP	955-1597RP
4	4	SET SCREW, WEAR RING TO COVER	M6 X 6		
5	2	WEAR RING	955-1609RP	955-1610RP	955-1608RP
6	1	IMPELLER (SS)	955-1630RP	955-1631RP	955-1632RP
6	1	IMPELLER (BRZ)	955-1652RP	955-1653RP	955-1654RP
7	2	O-RING, CASING/COVER	955-1660RP	955-1661RP	
8	1	COVER A, NON-DRIVE END	955-1573RP	955-1574RP	955-1575RP
9	1	CASING (125#)	955-1529RP	955-1530RP	955-1531RP
9	1	CASING (250#)	955-1551RP	955-1552RP	955-1553RP
10	2	DRAIN PLUG, CASING	3/8"		
11	32	BOLT, CASING	M20 X 50		
12	2	O-RING, IMPELLER/SLEEVE	955-1678RP	955-1679RP	

SEAL PARTS

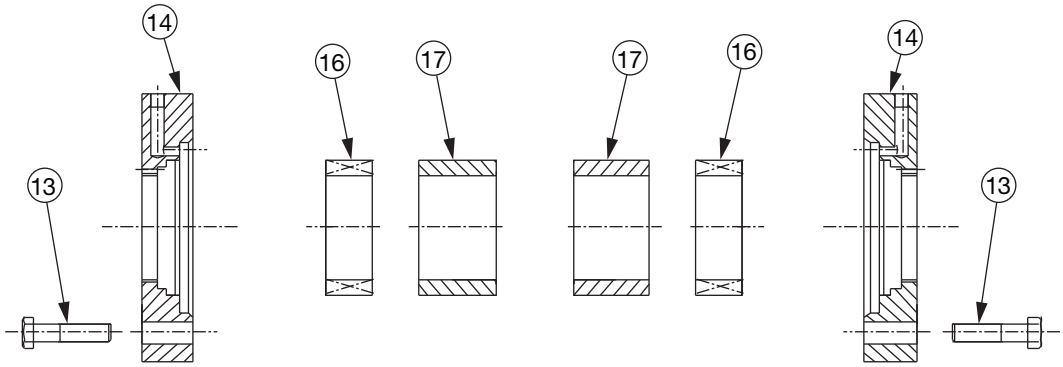

AW-976 REV – B

ITEM NO.	QTY. REQ.	DESCRIPTION	PART NUMBERS		
			PUMP MODEL 141213	PUMP MODEL 161217	PUMP MODEL 161415
13	8	BOLT, SEAL COVER	M16 X 60		
14	2	SEAL COVER	955-1716RP	955-1717RP	
16	2	MECHANICAL SEAL, UNBALANCED	955-2403RP	955-1843RP	
16	2	MECHANICAL SEAL, BALANCED	955-1847RP	955-1848RP	
17	2	BUSHING, SEAL	955-1721RP	955-1722RP	

COUPLING GUARD PARTS

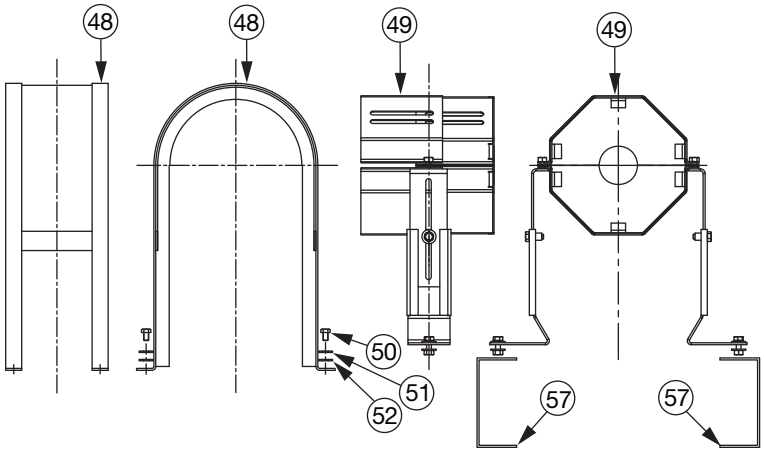

AW-979 REV –

ITEM NO.	QTY. REQ.	DESCRIPTION	PART NUMBERS		
			PUMP MODEL 141213	PUMP MODEL 161217	PUMP MODEL 161415
48	1	STANDARD COUPLING GUARD	955-1731RP	955-1732RP	
49	1	OSHA COUPLING GUARD	955-1503RP		
50	4	SCREW, COUPLING GUARD	M10 X 16		
51	4	LOCKWASHER, COUPLING GUARD	M10		
52	4	WASHER, COUPLING GUARD	M10		
57	2	STAND, OSHA COUPLING GUARD	955-1791RP	955-1792RP	

BEARING PARTS

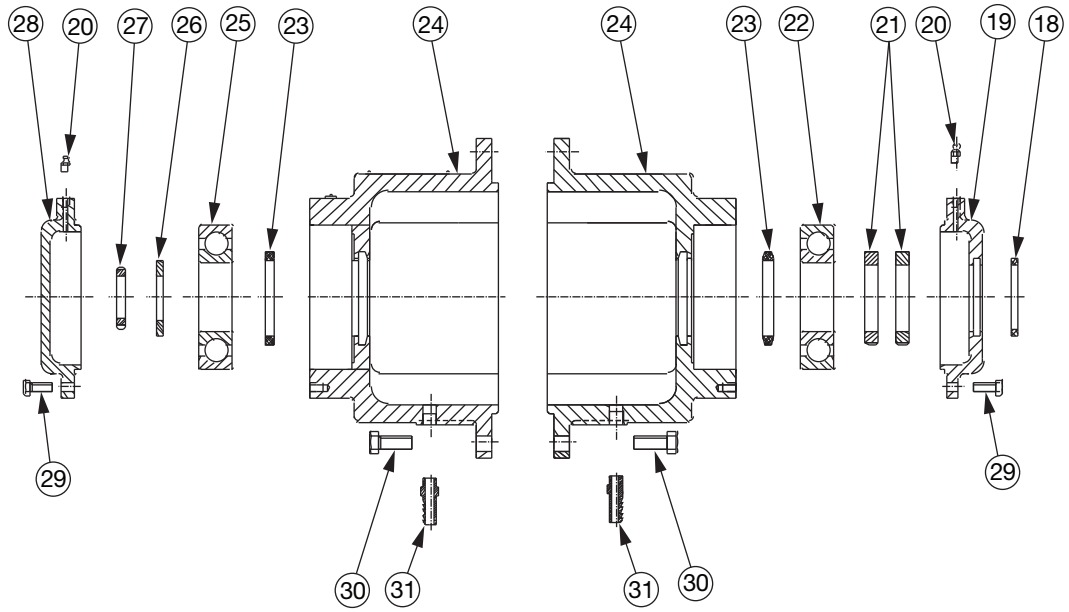

ITEM NO.	QTY. REQ.	DESCRIPTION	PART NUMBERS		
			PUMP MODEL 141213	PUMP MODEL 161217	PUMP MODEL 161415
18	1	SEAL, BEARING COVER	955-1776RP	955-1777RP	
19	1	BEARING COVER (DE)	955-1746RP	955-1747RP	
20	2	GREASE FITTING	M8 X 1		
21	2	NUT, BEARING RETAINING (DE)	M68 X 2	M80 X 2	
22	1	BEARING (DE)	953-1874RP	955-1829RP	
23	2	SEAL, BEARING HOUSING	955-1771RP	955-1772RP	
24	2	BEARING HOUSING	955-1736RP	955-1737RP	
25	1	BEARING (NDE)	953-1874RP	955-1829RP	
26	1	WASHER, BEARING RETAINING	A85	A100	
27	1	NUT, BEARING RETAINING (NDE)	M45 X 1.5	M50 X 1 5	
28	1	BEARING COVER (NDE)	955-1741RP	955-1742RP	
29	8	BOLT, BEARING COVER	M10 X 30		
30	16	BOLT, BEARING HOUSING	M16 X 40		
31	2	HOSE ADAPTER	3/8"		

AW-977 REV – A

SHAFT & COUPLER PARTS (page 1 of 2)

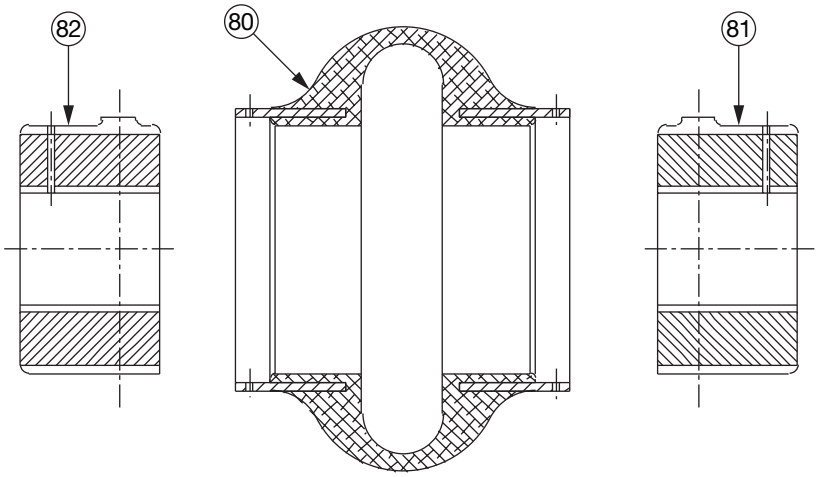

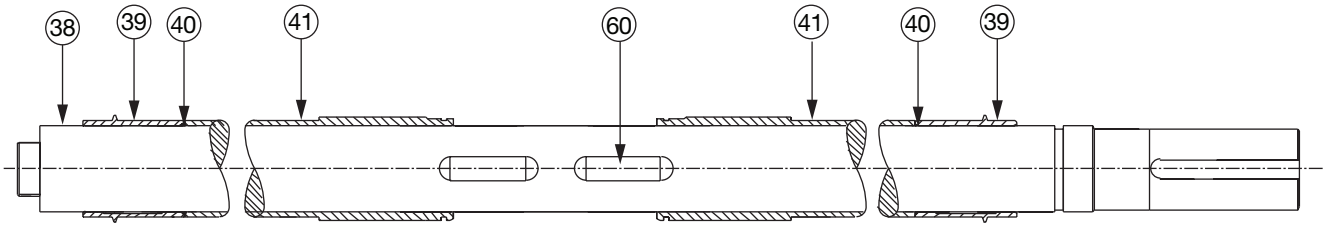

ITEM NO.	NO. REQ.	DESCRIPTION	PART NUMBERS		
			PUMP MODEL 141213	PUMP MODEL 161217	PUMP MODEL 161415
60	1	IMPELLER KEY	955-1700RP	955-1701RP	
38	1	SHAFT KIT CS CW *	955-1666RP	955-1667RP	
38	1	SHAFT KIT SS CW *	955-1680RP	955-1681RP	
39	2	SPACER BEARING (CI)	955-1690RP	955-1691RP	
40	2	O-RING, SLEEVE	955-1673RP	955-1674RP	
41	2	SHAFT SLEEVE (BRZ.)	955-1786RP	955-1787RP	
41	2	SHAFT SLEEVE (SS)	955-1791RP	955-1792RP	

* See back page for CCW shaft kits and kit contents.

SHAFT & COUPLER PARTS (page 2 of 2)

ITEM NO.	NO. REQ.	DESCRIPTION	PUMP MODEL	IEC MTR FRAME SIZE					
				225M	250M	280S	280M	315S	315M
80	1	ELEMENT	141213	953-2475RP	953-2478RP	953-2478RP	953-2544RP	953-2544RP	-
			161217	-	-	-	-	-	-
			161415	-	-	-	953-2544RP	953-2544RP	953-2545RP
				315L	355M	355L			
80	1	ELEMENT	141213	-	-	-			
			161217	953-4046RP	953-4046RP	953-4055RP			
			161415		-	-			

ITEM NO.	NO. REQ.	DESCRIPTION	PUMP MODEL	IEC MTR FRAME SIZE					
				225M	250M	280S	280M	315S	315M
81	1	HUB, MOTOR	141213	953-3111RP	953-3118RP	953-3112RP	953-3314RP	953-3318RP	-
			161217	-	-	-	-	-	-
			161415	-	-	-	953-3314RP	953-3318RP	953-3331RP
				315L	355M	355L			
81	1	HUB, MOTOR	141213	-	-	-			
			161217	953-4106RP	953-4200RP	953-4258RP			
			161415		-	-			

ITEM NO.	NO. REQ.	DESCRIPTION	PUMP MODEL	IEC MTR FRAME SIZE					
				225M	250M	280S	280M	315S	315M
82	1	HUB, PUMP	141213	953-3316RP	953-3118RP	953-3118RP	953-3190RP	953-3190RP	-
			161217	-	-	-	-	-	-
			161415	-	-	-	953-3314RP	953-3314RP	953-4092RP
				315L	355M	355L			
82	1	HUB, PUMP	141213	-	-	-			
			161217	953-4047RP	953-4047RP	953-4099RP			
			161415		-	-			

ITEM NO.	NO. REQ.	DESCRIPTION	PUMP MODEL	NEMA MTR FRAME SIZE					
				326T	364T	365T	404T	405T	444T
80	1	ELEMENT	141213	953-2475RP	953-2475RP	953-2478RP	953-2478RP	953-2544RP	953-2544RP
			161217	-	-	-	-	-	
			161415	-	-	-	953-2478RP	953-2544RP	953-2545RP
				445T	447T	449T	5008	5010	5012
80	1	ELEMENT	141213	953-2545RP	953-2545RP	953-2545RP	-	-	-
			161217	953-4046RP	953-4046RP	953-4046RP	953-4046RP	953-4055RP	953-4055RP
			161415					953-4046RP	-

ITEM NO.	NO. REQ.	DESCRIPTION	PUMP MODEL	NEMA MTR FRAME SIZE					
				326T	364T	365T	404T	405T	444T
81	1	HUB, MOTOR	141213	953-2539RP	953-2477RP	953-2542RP	953-2480RP	953-3925RP	953-2549RP
			161217	-	-	-	-	-	
			161415	-	-	-	953-2480RP	953-3925RP	953-2551RP
				445T	447T	449T	5008	5010	5012
81	1	HUB, MOTOR	141213	953-2551RP	953-2551RP	953-2551RP	-	-	-
			161217	953-4052RP	953-4052RP	953-4052RP	953-4093RP	953-4097RP	953-4097RP
			161415					953-4093RP	-

ITEM NO.	NO. REQ.	DESCRIPTION	PUMP MODEL	NEMA MTR FRAME SIZE					
				326T	364T	365T	404T	405T	444T
82	1	HUB, PUMP	141213	953-3316RP	953-3316RP	953-3118RP	953-3118RP	953-3190RP	953-3190RP
			161217	-	-	-	-	-	953-3314RP
			161415	-	-	-	953-3112RP	953-3314RP	953-4092RP
				445T	447T	449T	5008	5010	5012
82	1	HUB, PUMP	141213	953-4071RP	953-4071RP	953-4071RP	-	-	-
			161217	953-4047RP	953-4047RP	953-4047RP	953-4047RP	953-4099RP	953-4099RP
			161415					953-4047RP	-

MOTOR PARTS

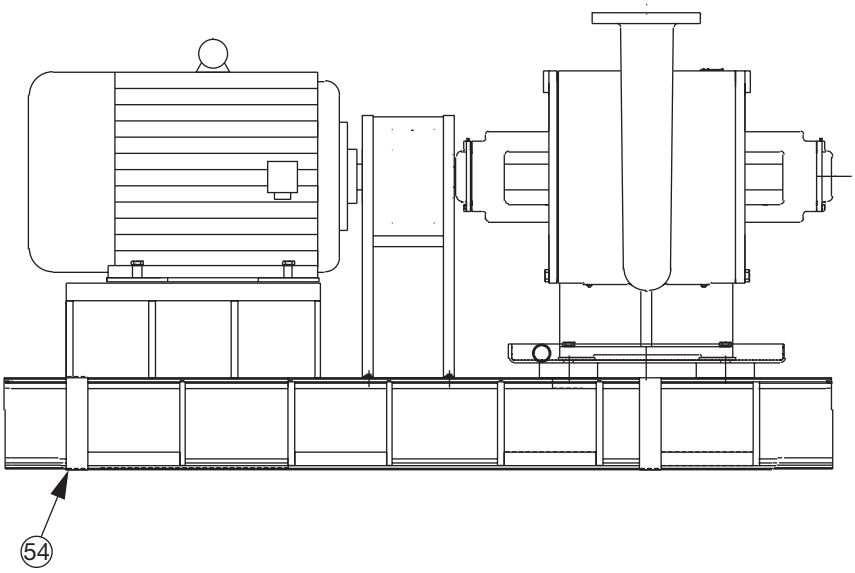

ITEM NO.	QTY. REQ.	DESCRIPTION	PUMP MODEL	IEC MTR FRAME SIZE							
				225M	250M	280S	280M	315S	315M	315L	355M
54	1	BASE, FABRICATED	141213	955-1973RP	955-2017RP	955-2018RP	955-2018RP	955-2019RP	–	–	–
			161217	–	–	–	–	–	–	955-2024RP	955-2025RP
			161415	–	–	–	955-2022RP	955-2023RP	955-2024RP	955-2024RP	–

ITEM NO.	QTY. REQ.	DESCRIPTION	PUMP MODEL	IEC MTR FRAME SIZE
				355L
54	1	BASE, FABRICATED	141213	–
			161217	955-2025RP
			161415	–

ITEM NO.	QTY. REQ.	DESCRIPTION	PUMP MODEL	NEMA MTR FRAME SIZE							
				324T	326T	364T	365T	404T	405T	444T	445T
54	1	BASE, FABRICATED	141213	–	955-1972RP	955-1973RP	955-1973RP	955-1974RP	955-1974RP	955-1975RP	955-1975RP
			161217	–	–	–	–	–	–	955-1985RP	955-1985RP
			161415	–	–	–	–	955-1984RP	955-1984RP	955-1985RP	955-1985RP

ITEM NO.	QTY. REQ.	DESCRIPTION	PUMP MODEL	NEMA MTR FRAME SIZE							
				447T	449T	E5006	E5008	G5008	E5010	G5010	G5012
54	1	BASE, FABRICATED	141213	955-1976RP	955-2355RP	–	–	–	–	–	–
			161217	955-1986RP	955-2356RP	–	955-1989RP	955-1991RP	955-1990RP	955-1992RP	955-1993RP
			161415	955-1986RP	955-2356RP	–	955-1989RP	955-1991RP	–	955-1992RP	–

AW-980 REV – A

NOTE: 1. PARTS NOT IDENTIFIED WITH A BALLOON ARE FOR REFERENCE ONLY.
2. BASE NUMBERS LISTED ARE REPLACEMENTS FOR THE NEW DESIGNS ONLY. IF BASES WERE PURCHASED PRIOR TO 2-1-2012, PLEASE CONTACT TECH SUPPORT TO OBTAIN THE OBSOLETE BASE R.P. LIST.

TC/TS PARTS KITS

PUMP MODEL NUMBER	SHAFT		SHAFT KIT	BEARING RETAINING NUTS AND WASHERS KIT	MECHANICAL SEAL AND SEAL BUSHING KIT	O-RING KIT
TC/TS 141213	CW	CS	955-1666RP	955-2552RP	955-2565RP	955-2541RP
	CCW	CS	955-2419RP	955-2557RP		
	CW	SS	955-1680RP	955-2552RP		
	CCW	SS	955-2423RP	955-2557RP		
TC/TS 161217	CW	CS	955-1667RP	955-2553RP	955-2566RP	955-2542RP
	CCW	CS	955-2420RP	955-2558RP		
	CW	SS	955-1681RP	955-2553RP		
	CCW	SS	955-2424RP	955-2558RP		
TC/TS 161415	CW	CS	955-1667RP	955-2553RP	955-2566RP	955-2542RP
	CCW	CS	955-2420RP	955-2558RP		
	CW	SS	955-1681RP	955-2553RP		
	CCW	SS	955-2424RP	955-2558RP		

LEGEND: CW - CLOCKWISE
CCW - COUNTER CLOCKWISE
CS - CARBON STEEL
SS - STAINLESS STEEL

TC/TS PARTS KIT CONTENTS			
SHAFT KIT	BEARING RETAINING NUTS AND WASHERS KIT	MECHANICAL SEAL AND SEAL BUSHING KIT	O-RING KIT
Shaft (1)	Nut, DE (2)	Mech. Seal Unbal (1)	O-Ring, Sleeve (2)
O-Ring (2)	Nut, NDE (1)	Seal Bushing (1)	O-Ring, Impeller (2)
Nut, DE (2)	Washer (1)		O-Ring, Seal Cover (2)
Nut, NDE (1)			O-Ring, Casing (2)
O-Ring, Impeller (2)			
O-Ring, Seal Cover (2)			
Washer (1)			

TACO, INC., 1160 Cranston Street, Cranston, RI 02920 Telephone: (401) 942-8000 FAX: (401) 942-2360.
TACO (Canada), Ltd., 8450 Lawson Road, Unit #3, Milton, Ontario L9T 0J8. Telephone: 905/564-9422. FAX: 905/564-9436.
Visit our web site at: http://www.taco-hvac.com

Printed in USA
Copyright 2012
TACO, Inc.