Replacement Parts List

304-454

MODELS TC/TS 100821, TC/TS 121014, TC/TS 121018

SUPERSEDES: September 1, 2012

EFFECTIVE: November 1, 2012

WHEN SELECTING AND ORDERING PARTS, ALWAYS REFER TO SERIAL NUMBER ON NAMEPLATE

00 00 00 00 0 0 0 0 0 0 0 0 0

- TC (SERIES)
- SUCTION SIZE
- DISCHARGE SIZE
- NOMINAL IMPELLER DIAMETER
- SEAL DESIGN
- MATERIAL OF CONSTRUCTION
- MOTOR FRAME SIZE
- FRAME STYLE
- MECHANICAL DESIGN
- BASE DESIGN
- BALL BEARINGS
- COUPLER OPTION
- SHIPPING/MANUFACTURING

CASING & IMPELLER PARTS

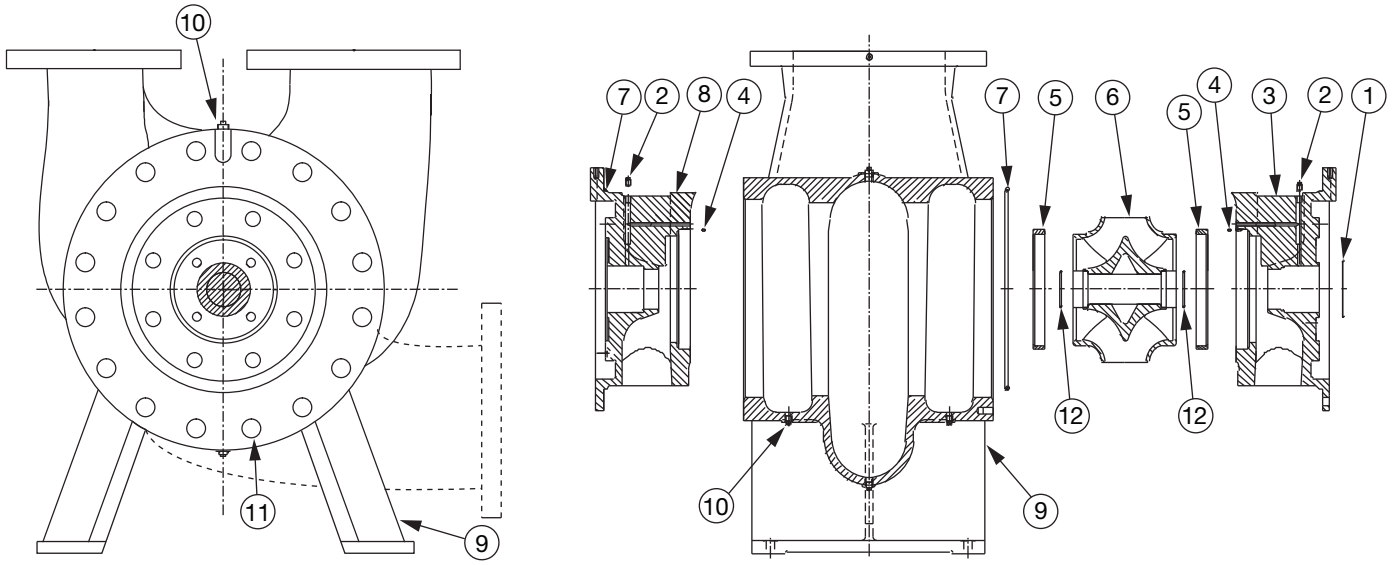

ITEM NO.	QTY. REQ.	DESCRIPTION	PART NUMBERS		
			PUMP MODEL 100821	PUMP MODEL 121014	PUMP MODEL 121018
1	2	O-RING, CASING COVER/SEAL COVER	955-1685RP		955-1686RP
2	2	DRAIN PLUG, COVER	1/4"		
3	1	COVER B, DRIVE END	955-1592RP	955-1593RP	955-1594RP
4	4	SET SCREW, WEAR RING TO COVER	M6 X 6		
5	2	WEAR RING	955-1607RP	955-1608RP	
6	1	IMPELLER (SS)	955-1627RP	955-1628RP	955-1629RP
6	1	IMPELLER (BRZ)	955-1649RP	955-1650RP	955-1651RP
7	2	O-RING, CASING/COVER	955-1658RP		955-1659RP
8	1	COVER A, NON-DRIVE END	955-1570RP	955-1571RP	955-1572RP
9	1	CASING (125#)	955-1526RP	955-1527RP	955-1528RP
9	1	CASING (250#)	955-1548RP	955-1549RP	955-1550RP
10	2	DRAIN PLUG, CASING	3/8"		
11	32	BOLT, CASING	M20 X 50 (QTY. 40)	M20 X 50	
12	2	O-RING, IMPELLER/SLEEVE	955-1678RP		955-1679RP

AW-969 REV -

SEAL PARTS

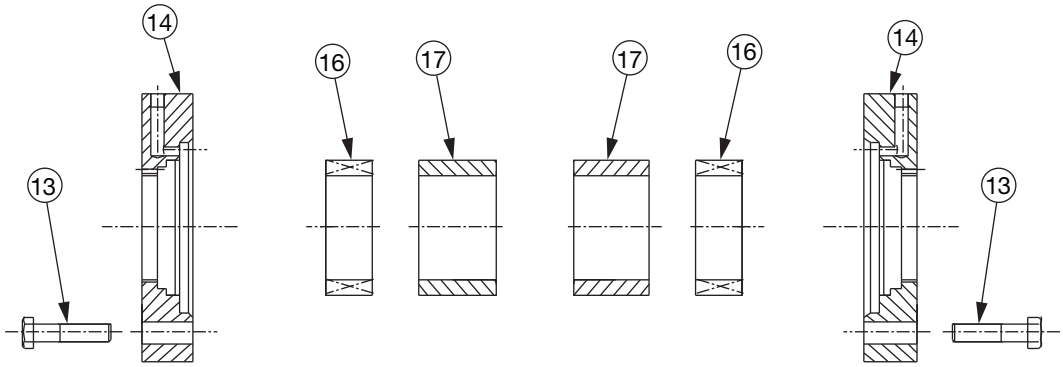

AW-970 REV – B

ITEM NO.	QTY. REQ.	DESCRIPTION	PART NUMBERS		
			PUMP MODEL 100821	PUMP MODEL 121014	PUMP MODEL 121018
13	8	BOLT, SEAL COVER	M16 X 60		
14	2	SEAL COVER	955-1716RP		955-1717RP
16	2	MECHANICAL SEAL, UNBALANCED	955-2403RP		955-1843RP
16	2	MECHANICAL SEAL, BALANCED	955-1847RP		955-1848RP
17	2	BUSHING, SEAL	955-1721RP		955-1722RP

COUPLING GUARD PARTS

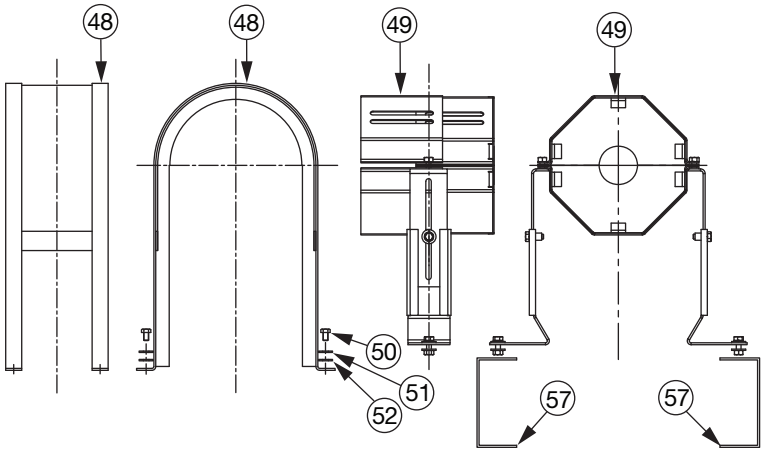

AW-973 REV –

ITEM NO.	QTY. REQ.	DESCRIPTION	PART NUMBERS		
			PUMP MODEL 100821	PUMP MODEL 121014	PUMP MODEL 121018
48	1	STANDARD COUPLING GUARD	955-1731RP		955-1732RP
49	1	OSHA COUPLING GUARD	955-1503RP		
50	4	SCREW, COUPLING GUARD	M10 X 16		
51	4	LOCKWASHER, COUPLING GUARD	M10		
52	4	WASHER, COUPLING GUARD	M10		
57	2	STAND, OSHA COUPLING GUARD	955-1506RP		955-1507RP

BEARING PARTS

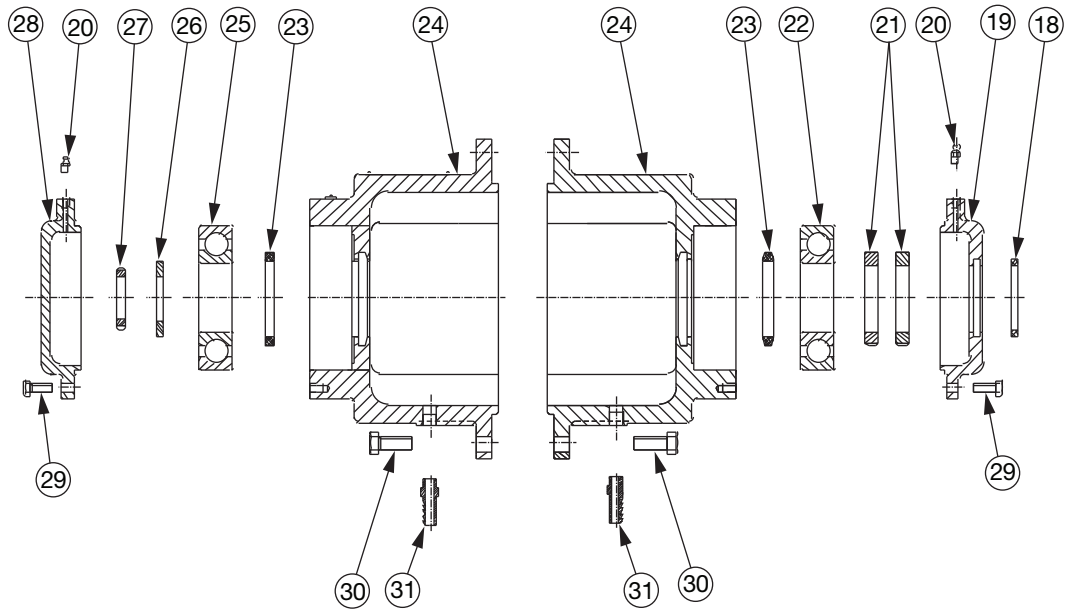

ITEM NO.	QTY. REQ.	DESCRIPTION	PART NUMBERS		
			PUMP MODEL 100821	PUMP MODEL 121014	PUMP MODEL 121018
18	1	SEAL, BEARING COVER	955-1776RP		955-1777RP
19	1	BEARING COVER, DE	955-1746RP		955-1747RP
20	2	GREASE FITTING	M8 X 1		
21	2	NUT, BEARING RETAINING (DE)	M68 X 2		M80 X 2
22	1	BEARING (DE)	955-1767RP	955-1068RP	955-1081RP
23	2	SEAL, BEARING HOUSING	955-1771RP		955-1772RP
24	2	BEARING HOUSING	955-1736RP		955-1737RP
25	1	BEARING (NDE)	955-1767RP	955-1068RP	955-1081RP
26	1	WASHER, BEARING RETAINING	A85		A100
27	1	NUT, BEARING RETAINING (NDE)	M45 X 1.5		M50 X 1.5
28	1	BEARING COVER (NDE)	955-1741RP		955-1742RP
29	8	BOLT, BEARING COVER	M10 X 30		
30	16	BOLT, BEARING HOUSING	M16 X 40		
31	2	HOSE ADAPTER	3/8"		

AW-971 REV – A

SHAFT & COUPLER PARTS (page 1 of 2)

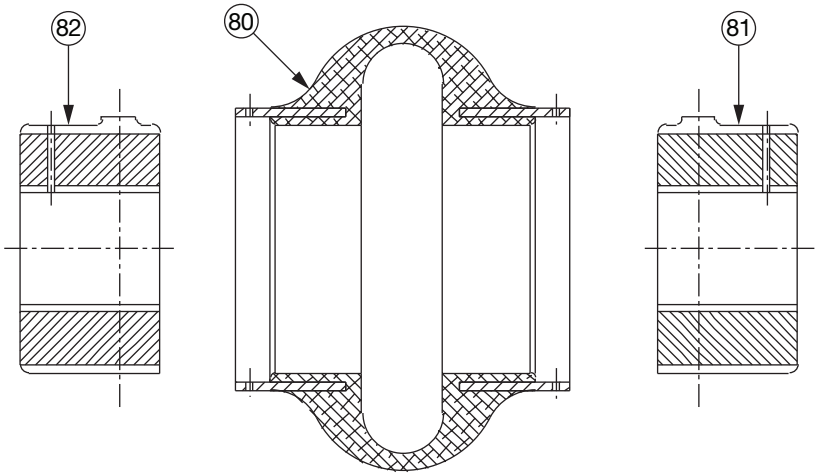

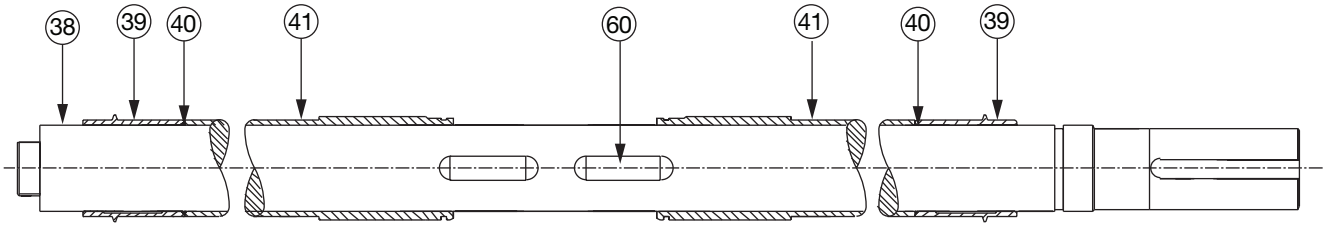

ITEM NO.	QTY. REQ.	DESCRIPTION	PART NUMBERS		
			PUMP MODEL 100821	PUMP MODEL 121014	PUMP MODEL 121018
60	1	IMPELLER KEY	955-1700RP		955-1701RP
38	1	SHAFT KIT CS CW *	955-1666RP		955-1667RP
38	1	SHAFT KIT SS CW *	955-1680RP		955-1681RP
39	2	SPACER BEARING (CI)	955-1690RP		955-1691RP
40	2	O-RING, SLEEVE	955-1673RP		955-1674RP
41	2	SHAFT SLEEVE (BRZ.)	955-1786RP		
41	2	SHAFT SLEEVE (SS)	955-1791RP		

* See back page for CCW shaft kits and kit contents.

AW-972 REV – C (1 of 2)

SHAFT & COUPLER PARTS (page 2 of 2)

ITEM NO.	QTY. REQ.	DESCRIPTION	PUMP MODEL	IEC MTR FRAME SIZE					
				250M	280S	280M	315S	315M	315L
80	1	ELEMENT	100821	-	-	-	953-2544RP	953-2545RP	953-4046RP
			121014	953-2478RP	953-2478RP	953-2544RP			
			121018	-	-	-			
				355M	355L				
80	1	ELEMENT	100821	953-4046RP	953-4055RP				
			121014	-	-				
			121018	953-4046RP	953-4055RP				

ITEM NO.	QTY. REQ.	DESCRIPTION	PUMP MODEL	IEC MTR FRAME SIZE					
				250M	280S	280M	315S	315M	315L
81	1	HUB, MOTOR	100821	-	-	-	953-3318RP	953-3331RP	953-4106RP
			121014	953-3118RP	953-3112RP	953-3314RP			
			121018	-	-	-			
				355M	355L				
81	1	HUB, MOTOR	100821	953-4200RP	953-4258RP				
			121014	-	-				
			121018	953-4200RP	953-4258RP				

ITEM NO.	QTY. REQ.	DESCRIPTION	PUMP MODEL	IEC MTR FRAME SIZE					
				250M	280S	280M	315S	315M	315L
82	1	HUB, PUMP	100821	-	-	-	953-3190RP	953-4071RP	953-4095RP
			121014	953-3118RP	953-3118RP	953-3190RP		953-4071RP	953-4095RP
			121018	-	-	-	953-3314RP	953-4092RP	953-4047RP
				355M	355L				
82	1	HUB, PUMP	100821	953-4095RP	953-4098RP				
			121014	-	-				
			121018	953-4047RP	953-4099RP				

ITEM NO.	QTY. REQ.	DESCRIPTION	PUMP MODEL	NEMA MTR FRAME SIZE					
				364T	365T	404T	405T	444T	445T
80	1	ELEMENT	100821	-	-	-	953-2478RP	953-2545RP	953-4046RP
			121014	953-2475RP	953-2475RP	953-2478RP	953-2544RP		953-2545RP
			121018	-	-	-	953-2478RP		953-4046RP
				447T	449T	5008	5010	5012	
80	1	ELEMENT	100821	953-4046RP	953-4055RP	953-4046RP	953-4055RP	953-4055RP	
			121014	953-2545RP	953-4046RP	-	-	-	
			121018	953-4046RP		953-4046RP	953-4055RP	953-4055RP	

ITEM NO.	QTY. REQ.	DESCRIPTION	PUMP MODEL	NEMA MTR FRAME SIZE					
				364T	365T	404T	405T	444T	445T
81	1	HUB, MOTOR	100821	-	-	-	953-2480RP	953-2551RP	953-4052RP
			121014	953-2477RP	953-2477RP	953-2480RP	953-3925RP		953-2551RP
			121018	-	-	-	953-2480RP		953-4052RP
				447T	449T	5008	5010	5012	
81	1	HUB, MOTOR	100821	953-4052RP	953-4060RP	953-4093RP	953-4097RP	953-4097RP	
			121014	953-2551RP	953-4052RP	-	-	-	
			121018	953-4052RP		953-4093RP	953-4097RP	953-4097RP	

ITEM NO.	QTY. REQ.	DESCRIPTION	PUMP MODEL	NEMA MTR FRAME SIZE					
				364T	365T	404T	405T	444T	445T
82	1	HUB, PUMP	100821	-	-	-	953-3118RP	953-4071RP	953-4095RP
			121014	953-3316RP	953-3316RP	953-3118RP	953-3190RP		953-4071RP
			121018	-	-	-	953-3112RP	953-4092RP	953-4047RP
				447T	449T	5008	5010	5012	
82	1	HUB, PUMP	100821	953-4095RP	953-4098RP	953-4095RP	953-4098RP	953-4098RP	
			121014	953-4071RP	953-4095RP	-	-	-	
			121018	953-4047RP	953-4047RP	953-4047RP	953-4099RP	953-4099RP	

MOTOR PARTS

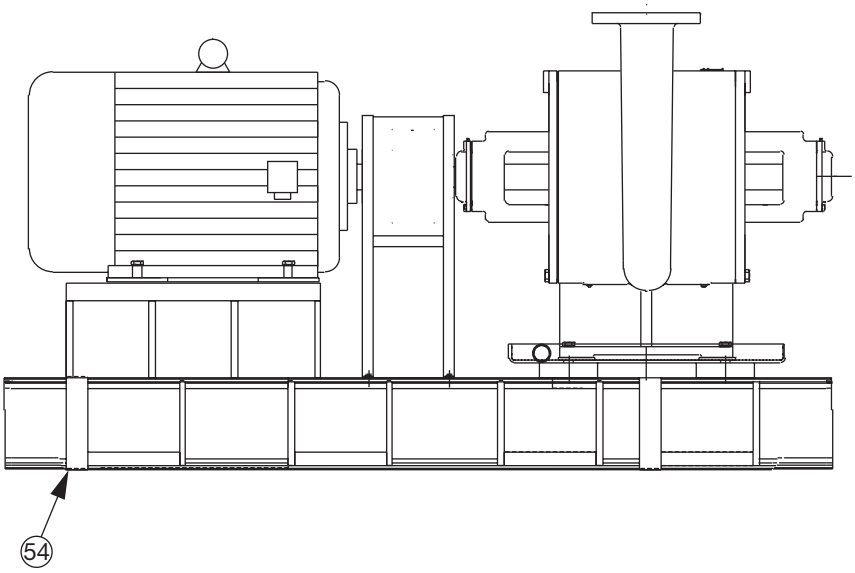

ITEM NO.	QTY. REQ.	DESCRIPTION	PUMP MODEL	IEC MTR FRAME SIZE							
				250M	280S	280M	315S	315M	315L	355M	355L
54	1	BASE, FABRICATED	100821	-	-	-	955-2019RP	955-2020RP	955-2020RP	955-2021RP	955-2021RP
			121014	955-2017RP	955-2018RP	955-2018RP	955-2019P	955-2020RP	955-2020RP	-	-
			121018	-	-	-	955-2023RP	955-2024RP	955-2024RP	955-2025RP	955-2025RP

ITEM NO.	QTY. REQ.	DESCRIPTION	PUMP MODEL	NEMA MTR FRAME SIZE							
				364T	365T	404T	405T	444T	445T	447T	449T
54	1	BASE, FABRICATED	100821	-	-	-	955-1974RP	955-1975RP	955-1975RP	955-1976RP	955-2355RP
			121014	955-1973RP	955-1973RP	955-1974RP	955-1974P	955-1975RP	955-1975RP	955-1976RP	955-2355RP
			121018	-	-	-	955-1984RP	955-1985RP	955-1985RP	955-1986RP	955-2356RP

AW-974 REV – A

ITEM NO.	QTY. REQ.	DESCRIPTION	PUMP MODEL	NEMA MTR FRAME SIZE							
				E5006	E5008	G5008	E5010	G5010	G5012	E5012	
54	1	BASE, FABRICATED	100821	-	955-1978RP	955-1981RP	955-1979RP	955-1982RP	955-1983RP	955-2002RP	
			121014	-	955-1978RP	955-1981RP	-	-	-	-	
			121018	-	955-1989RP	955-1991RP	955-1990RP	955-1992RP	955-1993RP	-	

NOTE: 1. PARTS NOT IDENTIFIED WITH A BALLOON ARE FOR REFERENCE ONLY.
2. BASE NUMBERS LISTED ARE REPLACEMENTS FOR THE NEW DESIGNS ONLY. IF BASES WERE PURCHASED PRIOR TO 2-1-2012, PLEASE CONTACT TECH SUPPORT TO OBTAIN THE OBSOLETE BASE R.P. LIST.

TC/TS PARTS KITS

PUMP MODEL NUMBER	SHAFT		SHAFT KIT	BEARING RETAINING NUTS AND WASHERS KIT	MECHANICAL SEAL AND SEAL BUSHING KIT	O-RING KIT
TC/TS 100821	CW	CS	955-1666RP	955-2552RP	955-2565RP	955-2541RP
	CCW	CS	955-2419RP	955-2557RP		
	CW	SS	955-1680RP	955-2552RP		
	CCW	SS	955-2423RP	955-2557RP		
TC/TS 121014	CW	CS	955-1666RP	955-2552RP	955-2565RP	955-2541RP
	CCW	CS	955-2419RP	955-2557RP		
	CW	SS	955-1680RP	955-2552RP		
	CCW	SS	955-2423RP	955-2557RP		
TC/TS 121018	CW	CS	955-1667RP	955-2553RP	955-2566RP	955-2542RP
	CCW	CS	955-2420RP	955-2558RP		
	CW	SS	955-1681RP	955-2553RP		
	CCW	SS	955-2424RP	955-2558RP		

LEGEND:
CW - CLOCKWISE
CCW - COUNTER CLOCKWISE
CS - CARBON STEEL
SS - STAINLESS STEEL

TC/TS PARTS KIT CONTENTS			
SHAFT KIT	BEARING RETAINING NUTS AND WASHERS KIT	MECHANICAL SEAL AND SEAL BUSHING KIT	O-RING KIT
Shaft (1)	Nut, DE (2)	Mech. Seal Unbal (1)	O-Ring, Sleeve (2)
O-Ring (2)	Nut, NDE (1)	Seal Bushing (1)	O-Ring, Impeller (2)
Nut, DE (2)	Washer (1)		O-Ring, Seal Cover (2)
Nut, NDE (1)			O-Ring, Casing (2)
O-Ring, Impeller (2)			
O-Ring, Seal Cover (2)			
Washer (1)			

TACO, INC., 1160 Cranston Street, Cranston, RI 02920 Telephone: (401) 942-8000 FAX: (401) 942-2360.
TACO (Canada), Ltd., 8450 Lawson Road, Unit #3, Milton, Ontario L9T 0J8. Telephone: 905/564-9422. FAX: 905/564-9436.
Visit our web site at: http://www.taco-hvac.com

Printed in USA
Copyright 2012
TACO, Inc.