Replacement Parts List

304-453

MODELS TC/TS 080618, TC/TS 080622, TC/TS 100813, TC/TS 100816

SUPERSEDES: September 1, 2012

EFFECTIVE: January 1, 2013

WHEN SELECTING AND ORDERING PARTS, ALWAYS REFER TO SERIAL NUMBER ON NAMEPLATE

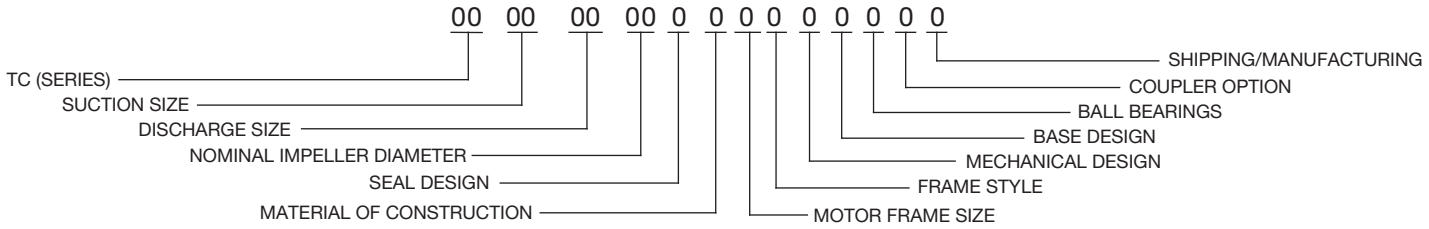

CASING & IMPELLER PARTS

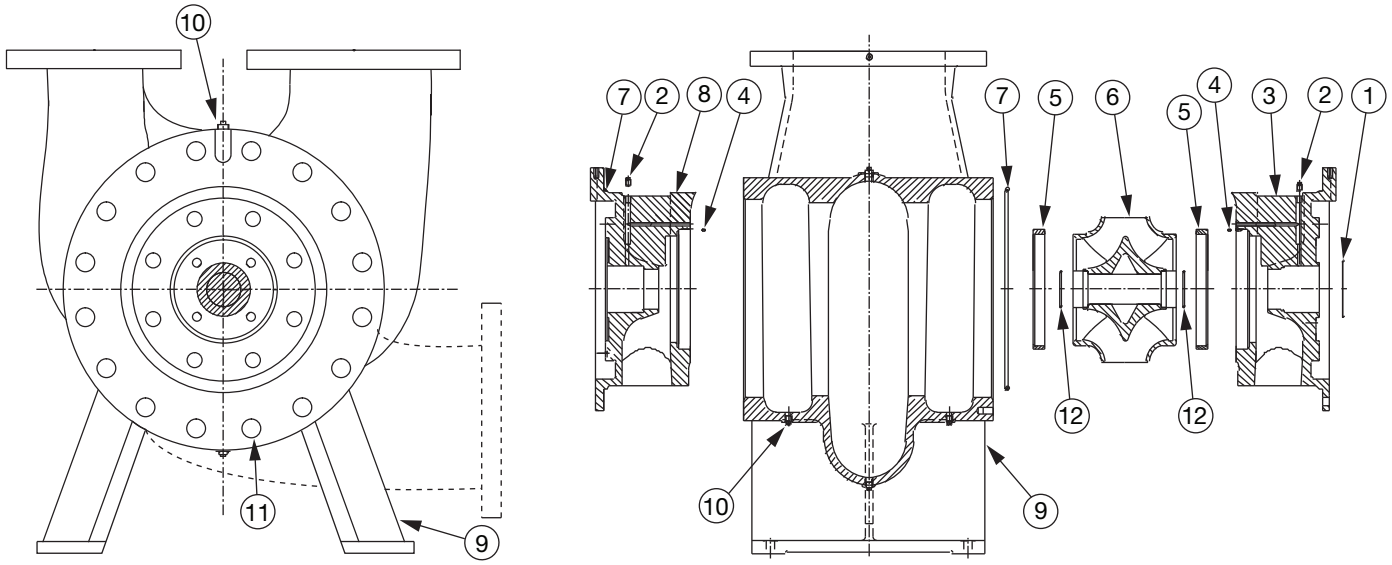

ITEM NO.	QTY. REQ.	DESCRIPTION	PART NUMBERS			
			PUMP MODEL 080618	PUMP MODEL 080622	PUMP MODEL 100813	PUMP MODEL 100816
1	2	O-RING, CASING COVER/SEAL COVER	955-1684RP			
2	2	DRAIN PLUG, COVER	1/4"			
3	1	COVER B, DRIVE END	955-1588RP	955-1589RP	955-1590RP	955-1591RP
4	4	SET SCREW, WEAR RING TO COVER	M6 X 6			
5	2	WEAR RING	955-1605RP		955-1606RP	
6	1	IMPELLER (SS)	955-1623RP	955-1624RP	955-1625RP	955-1626RP
6	1	IMPELLER (BRZ)	955-1645RP	955-1646RP	955-1647RP	955-1648RP
7	2	O-RING, CASING/COVER	955-1657RP			
8	1	COVER A, NON-DRIVE END	955-1566RP	955-1567RP	955-1568RP	955-1569RP
9	1	CASING (125#)	955-1522RP	955-1523RP	955-1524RP	955-1525RP
9	1	CASING (250#)	955-1544RP	955-1545RP	955-1546RP	955-1547RP
10	2	DRAIN PLUG, CASING	3/8"			
11	40	BOLT, CASING	M16 X 45	M20 X 50	M16 X 45 (QTY. 32)	
12	2	O-RING, IMPELLER/SLEEVE	955-1677RP			

AW-963 REV -

SEAL PARTS

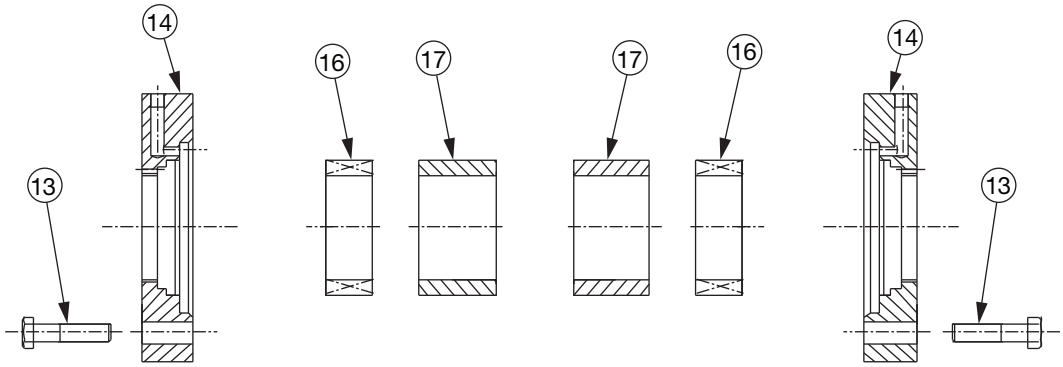

AW-964 REV – A

ITEM NO.	QTY. REQ.	DESCRIPTION	PART NUMBERS			
			PUMP MODEL 080618	PUMP MODEL 080622	PUMP MODEL 100813	PUMP MODEL 100816
13	8	BOLT, SEAL COVER	M16 X 50			M16 X 60
14	2	SEAL COVER	955-1715RP			
16	2	MECHANICAL SEAL, UNBALANCED	955-1841RP			
16	2	MECHANICAL SEAL, BALANCED	955-1846RP			
17	2	BUSHING, SEAL	955-1720RP			

COUPLING GUARD PARTS

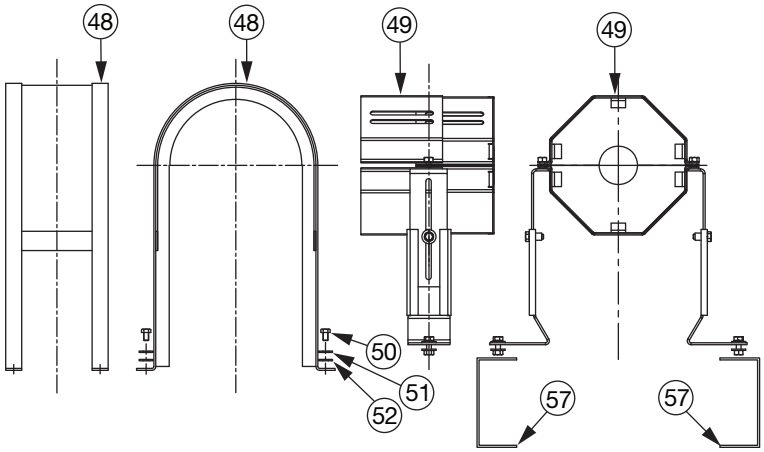

AW-967 REV – B

ITEM NO.	QTY. REQ.	DESCRIPTION	PART NUMBERS			
			PUMP MODEL TC/TS 080618	PUMP MODEL TC/TS 080622	PUMP MODEL TC/TS 100813	PUMP MODEL TC/TS 100816
48	1	STANDARD COUPLING GUARD	955-1730RP			
49	1	OSHA COUPLING GUARD	MOTOR FRAME < 405T USE 955-1503RP	MOTOR FRAME < 444T USE 955-1503RP		MOTOR FRAME < 404T USE 955-1503RP
49	1	OSHA COUPLING GUARD	MOTOR FRAME 405T THRU 447T USE 955-1197RP	MOTOR FRAME 444T USE 955-1197RP	MOTOR FRAME 444T OR LARGER USE 955-1197RP	MOTOR FRAME 405T THRU 447T USE 955-1197RP
49	1	OSHA COUPLING GUARD	MOTOR FRAME 449T USE 955-1198RP	MOTOR FRAME > 444T USE 955-1198RP	-----	MOTOR FRAME 449T USE 955-1198RP
50	4	SCREW, COUPLING GUARD	M10 X 16			
51	4	LOCKWASHER, COUPLING GUARD	M10			
52	4	WASHER, COUPLING GUARD	M10			
57	2	STAND, OSHA COUPLING GUARD	955-1502RP			

BEARING PARTS

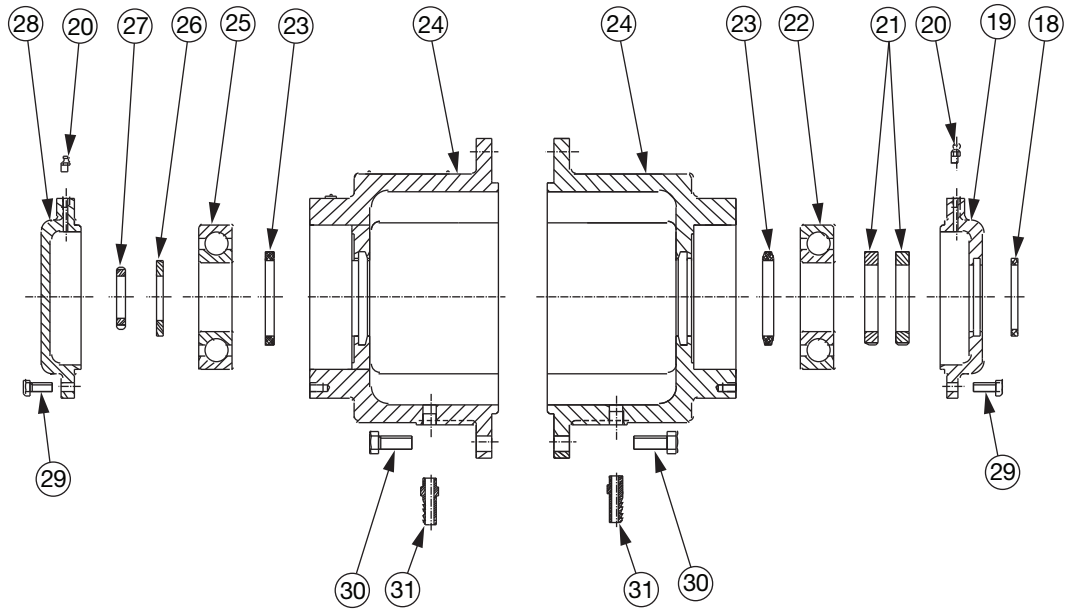

ITEM NO	QTY. REQ	DESCRIPTION	PART NUMBERS			
			PUMP MODEL 080618	PUMP MODEL 080622	PUMP MODEL 100813	PUMP MODEL 100816
18	1	SEAL, BEARING COVER	955-1775RP			
19	1	BEARING COVER (DE)	955-1745RP			
20	2	GREASE FITTING	M8 X 1			
21	2	NUT, BEARING RETAINING (DE)	M60 X 2			
22	1	BEARING (DE)	950-964RP			
23	2	SEAL, BEARING HOUSING	955-1770RP			
24	2	BEARING HOUSING	955-1735RP			
25	1	BEARING (NDE)	950-964RP			
26	1	WASHER, BEARING RETAINING	A75			
27	1	NUT, BEARING RETAINING (NDE)	M39 X 1.5			
28	1	BEARING COVER (NDE)	955-1740RP			
29	8	BOLT, BEARING COVER	M10 X 30			
30	16	BOLT, BEARING HOUSING	M12 X 35			
31	2	HOSE ADAPTER	3/8"			

SHAFT & COUPLER PARTS (page 1 of 3)

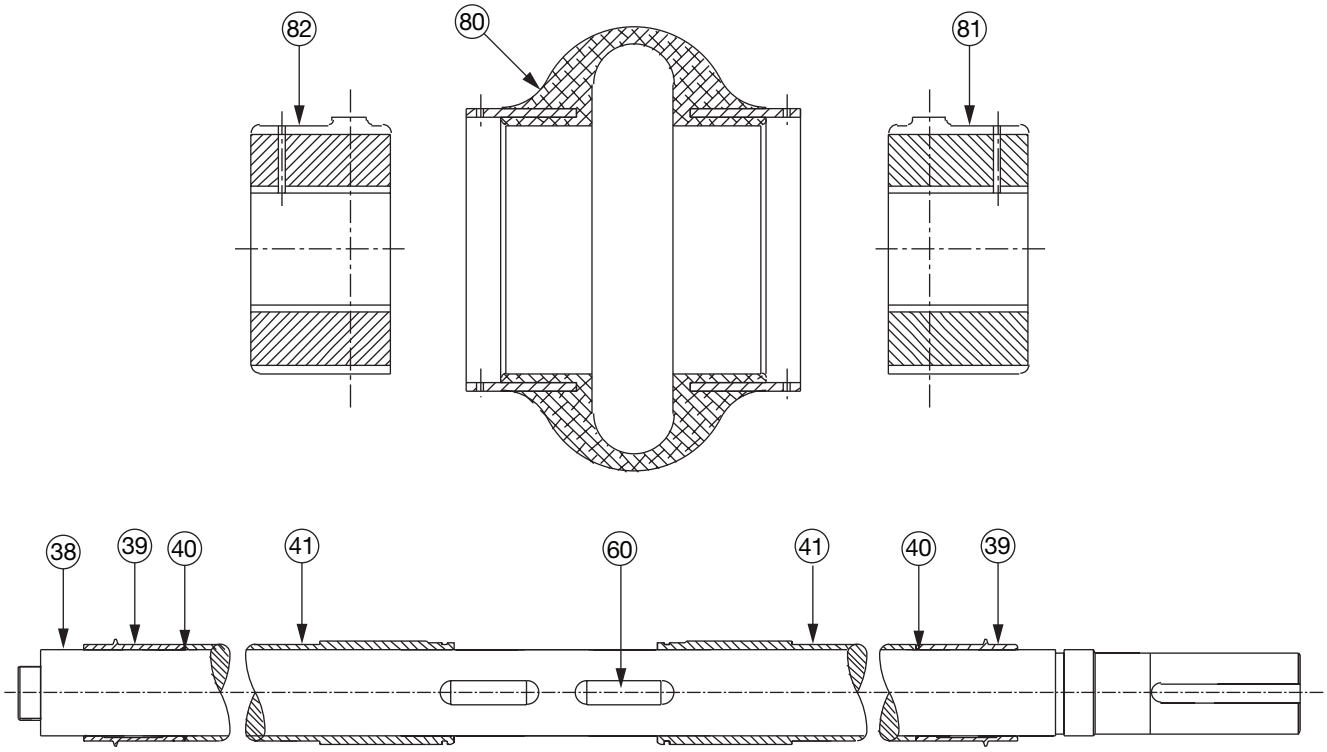

ITEM NO.	QTY. REQ.	DESCRIPTION	PART NUMBERS			
			PUMP MODEL 080618	PUMP MODEL 080622	PUMP MODEL 100813	PUMP MODEL 100816
60	1	IMPELLER KEY	955-1699RP			
38	1	SHAFT KIT CS CW *	955-1665RP			
38	1	SHAFT KIT SS CW *	955-1662RP			
39	2	SPACER BEARING (CI)	955-1689RP			
40	2	O-RING, SLEEVE	955-1672RP			
41	2	SHAFT SLEEVE (BRZ.)	955-1785RP			
41	2	SHAFT SLEEVE (SS)	955-1790RP			

* See back page for CCW shaft kits and kit contents.

SHAFT & COUPLER PARTS (page 2 of 3)

ITEM NO.	QTY. REQ.	DESCRIPTION	PUMP MODEL	NEMA MTR FRAME SIZE					
				286T	324T	326T	364T	365T	404T
80	1	ELEMENT	080618	–	–	953-2475RP	953-2475RP	953-2478RP	953-2478RP
			080622	–	–	–	–	–	–
			100813	953-2464RP	953-2464RP	953-2475RP	953-2475RP	953-2478RP	953-2478RP
			100816	–	–	953-2464RP			
				405T	444T	445T	447T	449T	5008
80	1	ELEMENT	080618	953-2544RP	953-2545RP	953-2545RP	953-2545RP	953-4046RP	–
			080622	953-2478RP		953-4046RP	953-4046RP		953-4046RP
			100813		953-2544RP	953-2545RP	953-2545RP	–	–
			100816	953-2544RP	953-2545RP			953-4046RP	–
				5010	5012				
80	1	ELEMENT	080618	–	–				
			080622	953-4055RP	953-4055RP				
			100813	–	–				
			100816	–	–				

ITEM NO.	QTY. REQ.	DESCRIPTION	PUMP MODEL	NEMA MTR FRAME SIZE					
				286T	324T	326T	364T	365T	404T
81	1	HUB, MOTOR	080618	–	–	953-2539RP	953-2477RP	953-2542RP	953-2480RP
			080622	–	–	–	–	–	–
			100813	953-2471RP	953-2472RP	953-2539RP	953-2477RP	953-2542RP	953-2480RP
			100816	–	–	953-2472RP			
				405T	444T	445T	447T	449T	5008
81	1	HUB, MOTOR	080618	953-3925RP	953-2551RP	953-2551RP	953-2551RP	953-4052RP	–
			080622	953-2480RP		953-4052RP	953-4052RP		953-4093RP
			100813		953-2549RP	953-2551RP	953-2551RP	–	–
			100816	953-3925RP	953-2551RP			953-4052RP	–
				5010	5012				
81	1	HUB, MOTOR	080618	–	–				
			080622	953-4097RP	953-4097RP				
			100813	–	–				
			100816	–	–				

ITEM NO.	QTY. REQ.	DESCRIPTION	PUMP MODEL	NEMA MTR FRAME SIZE					
				286T	324T	326T	364T	365T	404T
82	1	HUB, PUMP	080618	–	–	953-3337RP	953-3337RP	953-3307RP	953-3307RP
			080622	–	–	–	–	–	–
			100813	953-3053RP	953-3053RP	953-3337RP	953-3337RP	953-3307RP	953-3307RP
			100816	–	–	953-3053RP			
				405T	444T	445T	447T	449T	5008
82	1	HUB, PUMP	080618	953-3189RP	953-4080RP	953-4080RP	953-4080RP	953-4094RP	–
			080622	953-3307RP		953-4094RP	953-4094RP		953-4094RP
			100813		953-3189RP	953-4080RP	953-4080RP	–	–
			100816	953-3189RP	953-4080RP			953-4094RP	–
				5010	5012				
82	1	HUB, PUMP	080618	–	–				
			080622	953-4110RP	953-4110RP				
			100813	–	–				
			100816	–	–				

SHAFT & COUPLER PARTS (page 3 of 3)

ITEM NO.	QTY. REQ.	DESCRIPTION	PUMP MODEL	IEC MTR FRAME SIZE					
				225S	225M	250M	280S	280M	315S
80	1	ELEMENT	080618	953-2475RP	953-2475RP	953-2478RP	953-2478RP	953-2544RP	953-2544RP
			080622	–	–	–	–	–	
			100813	953-2475RP	953-2475RP	953-2478RP	953-2478RP	–	–
			100816	–				953-2544RP	953-2544RP
				315M	315L	355M	355L		
80	1	ELEMENT	080618	953-2545RP	953-2545RP	–	–		
			080622		953-4046RP	953-4046RP	953-4046RP		
			100813	–	–	–	–		
			100816	953-2545RP	–	–	–		

ITEM NO.	QTY. REQ.	DESCRIPTION	PUMP MODEL	IEC MTR FRAME SIZE					
				225S	225M	250M	280S	280M	315S
81	1	HUB, MOTOR	080618	953-3111RP	953-3111RP	953-3118RP	953-3112RP	953-3314RP	953-3318RP
			080622	–	–	–	–	–	
			100813	953-3111RP	953-3111RP	953-3118RP	953-3112RP	–	–
			100816	–				953-3314RP	953-3318RP
				315M	315L	355M	355L		
81	1	HUB, MOTOR	080618	953-3331RP	953-3331RP	–	–		
			080622		953-4106RP	953-4200RP	953-4200RP		
			100813	–	–	–	–		
			100816	953-3331RP	–	–	–		

ITEM NO.	QTY. REQ.	DESCRIPTION	PUMP MODEL	IEC MTR FRAME SIZE					
				225S	225M	250M	280S	280M	315S
82	1	HUB, PUMP	080618	953-3337RP	953-3337RP	953-3307RP	953-3307RP	953-3189RP	953-3189RP
			080622	–	–	–	–	–	
			100813	953-3337RP	953-3337RP	953-3307RP	953-3307RP	–	–
			100816	–				953-3189RP	953-3189RP
				315M	315L	355M	355L		
82	1	HUB, PUMP	080618	953-4080RP	953-4080RP	–	–		
			080622		953-4094RP	953-4094RP	953-4094RP		
			100813	–	–	–	–		
			100816	953-4080RP	–	–	–		

MOTOR PARTS

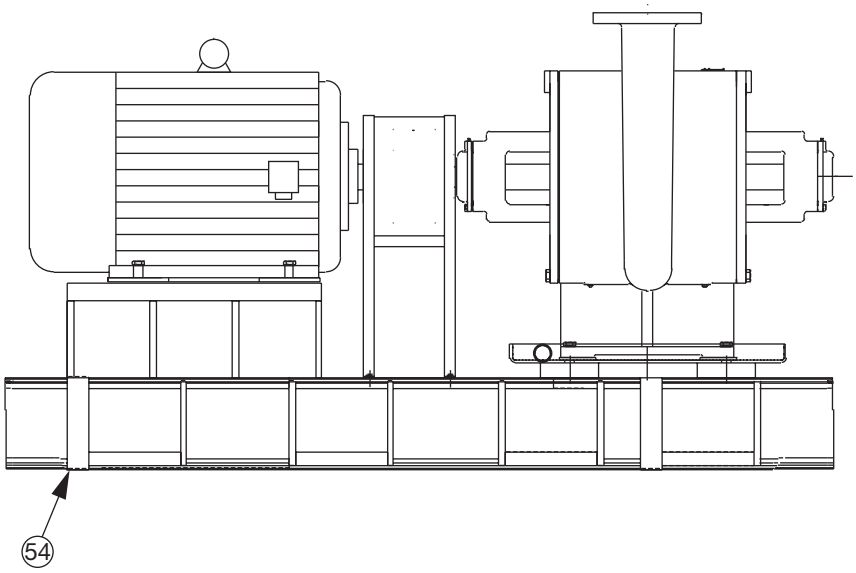

ITEM NO.	QTY. REQ.	DESCRIPTION	PUMP MODEL	IEC MTR FRAME SIZE							
				225S	225M	250M	280S	280M	315S	315M	315L
54	1	BASE, FABRICATED	080618	955-1962RP	955-1962RP	955-2013RP	955-2014RP	955-2014RP	955-2015RP	955-2016RP	955-2016RP
			080622	-	-	-	-	-	955-2010RP	955-2011RP	955-2011RP
			100813	955-1962RP	955-1962RP	955-2013RP	955-2014RP	-	-	-	-
			100816	-	955-1962RP	955-2013RP	955-2014RP	955-2014RP	955-2015RP	955-2016RP	-

ITEM NO.	QTY. REQ.	DESCRIPTION	PUMP MODEL	IEC MTR FRAME SIZE	
				355M	355L
54	1	BASE, FABRICATED	080618	-	-
			080622	955-2012RP	955-2012RP
			100813	-	-
			100816	-	-

ITEM NO.	QTY. REQ.	DESCRIPTION	PUMP MODEL	NEMA MTR FRAME SIZE							
				286T	324T	326T	364T	365T	404T	405T	444T
54	1	BASE, FABRICATED	080618	-	-	955-1961RP	955-1962RP	955-1962RP	955-1963RP	955-1963RP	955-1964RP
			080622	-	-	-	-	-		955-1999RP	955-2000RP
			100813	955-1998RP	955-1961RP	955-1961RP	955-1962RP	955-1962RP	955-1963RP	955-1963RP	955-1964RP
			100816	-	-	955-1961RP	955-1962RP	955-1962RP	955-1963RP	955-1963RP	955-1964RP

ITEM NO.	QTY. REQ.	DESCRIPTION	PUMP MODEL	NEMA MTR FRAME SIZE							
				445T	447T	449T	E5008	G5008	E5010	G5010	G5012
54	1	BASE, FABRICATED	080618	955-1964RP	955-1965RP	955-2353RP	-	-	-	-	-
			080622	955-2000RP	955-2001RP	955-2354RP	955-1967RP	955-1969RP	955-1968RP	955-1970RP	955-1971RP
			100813	955-1964RP	955-1965RP	-	-	-	-	-	-
			100816	955-1964RP	955-1965RP	955-2353RP	-	-	-	-	-

AW-968 REV – A

NOTE: 1. PARTS NOT IDENTIFIED WITH A BALLOON ARE FOR REFERENCE ONLY.
2. BASE NUMBERS LISTED ARE REPLACEMENTS FOR THE NEW DESIGNS ONLY. IF BASES WERE PURCHASED PRIOR TO 2-1-2012, PLEASE CONTACT TECH SUPPORT TO OBTAIN THE OBSOLETE BASE R.P. LIST.

TC/TS PARTS KITS

PUMP MODEL NUMBER	SHAFT		SHAFT KIT	BEARING RETAINING NUTS AND WASHERS KIT	MECHANICAL SEAL AND SEAL BUSHING KIT	O-RING KIT
TC/TS 080618	CW	CS	955-1665RP	955-2551RP	955-2564RP	955-2540RP
	CCW	CS	955-2418RP	955-2556RP		
	CW	SS	955-1662RP	955-2551RP		
	CCW	SS	955-2422RP	955-2556RP		
TC/TS 080622	CW	CS	955-1665RP	955-2551RP	955-2564RP	955-2540RP
	CCW	CS	955-2418RP	955-2556RP		
	CW	SS	955-1662RP	955-2551RP		
	CCW	SS	955-2422RP	955-2556RP		
TC/TS 100813	CW	CS	955-1665RP	955-2551RP	955-2564RP	955-2540RP
	CCW	CS	955-2418RP	955-2556RP		
	CW	SS	955-1662RP	955-2551RP		
	CCW	SS	955-2422RP	955-2556RP		
TC/TS 100816	CW	CS	955-1665RP	955-2551RP	955-2564RP	955-2540RP
	CCW	CS	955-2418RP	955-2556RP		
	CW	SS	955-1662RP	955-2551RP		
	CCW	SS	955-2422RP	955-2556RP		

LEGEND:
CW - CLOCKWISE
CCW - COUNTER CLOCKWISE
CS - CARBON STEEL
SS - STAINLESS STEEL

TC/TS PARTS KIT CONTENTS			
SHAFT KIT	**BEARING RETAINING NUTS AND WASHERS KIT**	**MECHANICAL SEAL AND SEAL BUSHING KIT**	**O-RING KIT**
Shaft (1)	Nut, DE (2)	Mech. Seal Unbal (1)	O-Ring, Sleeve (2)
O-Ring (2)	Nut, NDE (1)	Seal Bushing (1)	O-Ring, Impeller (2)
Nut, DE (2)	Washer (1)		O-Ring, Seal Cover (2)
Nut, NDE (1)			O-Ring, Casing (2)
O-Ring, Impeller (2)			
O-Ring, Seal Cover (2)			
Washer (1)			

TACO, INC., 1160 Cranston Street, Cranston, RI 02920 Telephone: (401) 942-8000 FAX: (401) 942-2360.
TACO (Canada), Ltd., 8450 Lawson Road, Unit #3, Milton, Ontario L9T 0J8. Telephone: 905/564-9422. FAX: 905/564-9436.
Visit our web site at: http://www.taco-hvac.com

Printed in USA
Copyright 2013
TACO, Inc.