Replacement Parts List

304-452

MODELS TC/TS 080510, TC/TS 080512, TC/TS 080515, TC/TS 080520, TC/TS 080612, TC/TS 080614

SUPERSEDES: September 1, 2012

EFFECTIVE: November 1, 2012

WHEN SELECTING AND ORDERING PARTS, ALWAYS REFER TO SERIAL NUMBER ON NAMEPLATE

00 00 00 00 0 0 0 0 0 0 0 0 0

- TC (SERIES)
- SUCTION SIZE
- DISCHARGE SIZE
- NOMINAL IMPELLER DIAMETER
- SEAL DESIGN
- MATERIAL OF CONSTRUCTION
- MOTOR FRAME SIZE
- FRAME STYLE
- MECHANICAL DESIGN
- BASE DESIGN
- BALL BEARINGS
- COUPLER OPTION
- SHIPPING/MANUFACTURING

CASING & IMPELLER PARTS

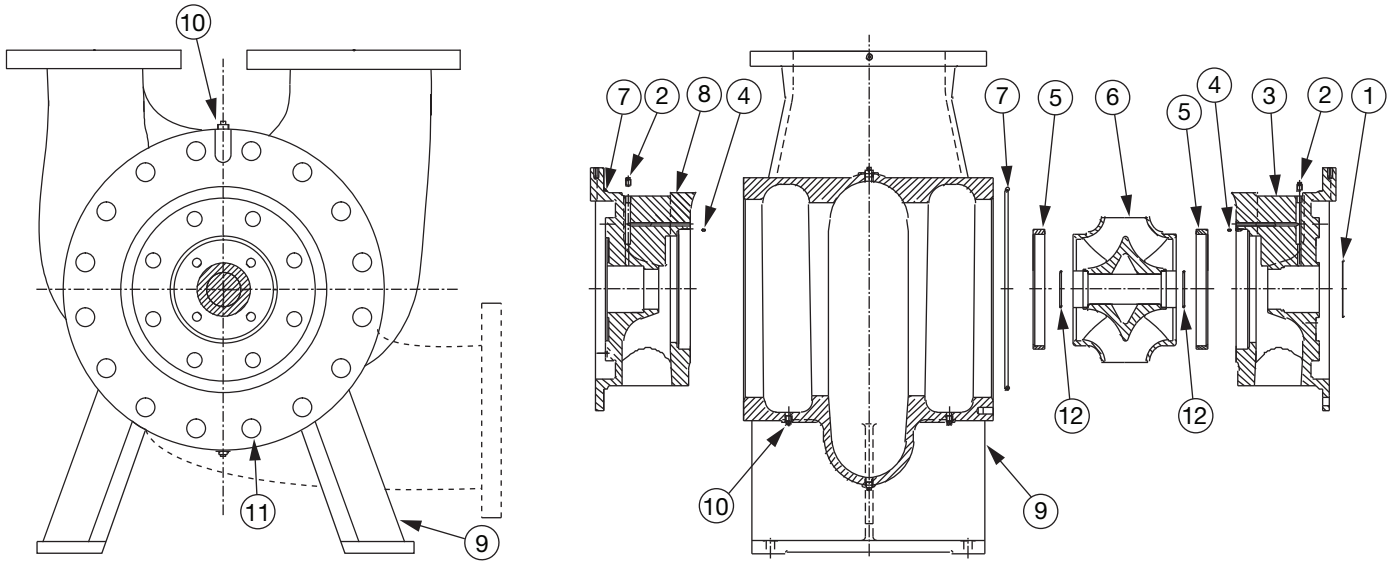

ITEM NO.	QTY. REQ.	DESCRIPTION	PART NUMBERS					
			PUMP MODEL 080510	PUMP MODEL 080512	PUMP MODEL 080515	PUMP MODEL 080520	PUMP MODEL 080612	PUMP MODEL 080614
1	2	O-RING, CASING COVER/SEAL COVER	955-1683RP					
2	2	DRAIN PLUG, COVER	1/4"					
3	1	COVER B, DRIVE END	955-1582RP	955-1583RP	955-1584RP	955-1585RP	955-1586RP	955-1587RP
4	4	SET SCREW, WEAR RING TO COVER	M6 X 6					
5	2	WEAR RING	955-1602RP				955-1603RP	955-1604RP
6	1	IMPELLER (SS)	955-1617RP	955-1618RP	955-1619RP	955-1620RP	955-1621RP	955-1622RP
6	1	IMPELLER (BRZ)	955-1639RP	955-1640RP	955-1641RP	955-1642RP	955-1643RP	955-1644RP
7	2	O-RING, CASING/COVER	955-1656RP					
8	1	COVER A, NON-DRIVE END	955-1560RP	955-1561RP	955-1562RP	955-1563RP	955-1564RP	955-1565RP
9	1	CASING (125#)	955-1516RP	955-1517RP	955-1518RP	955-1519RP	955-1520RP	955-1521RP
9	1	CASING (250#)	955-1538RP	955-1539RP	955-1540RP	955-1541RP	955-1542RP	955-1543RP
10	2	DRAIN PLUG, CASING	3/8"					
11	32	BOLT, CASING	M16 X 40 (QTY. 24)	M16 X 35	M16 X 40			
12	2	O-RING, IMPELLER/SLEEVE	955-1676RP					

SEAL PARTS

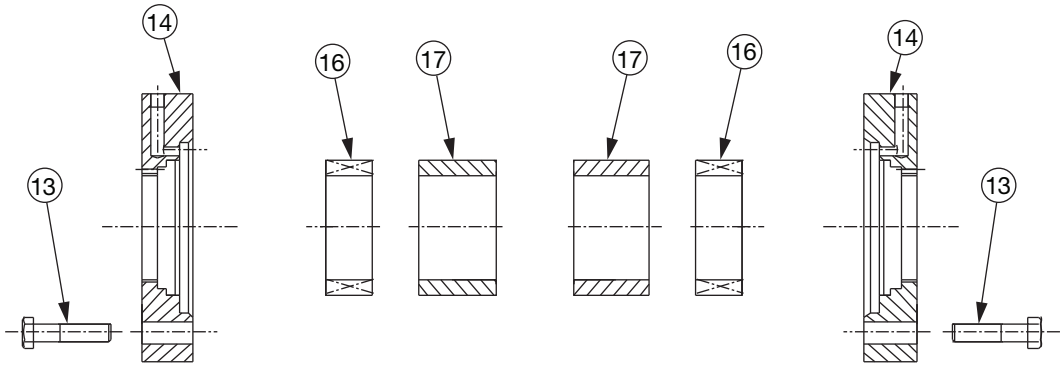

AW-958 REV – A

ITEM NO.	QTY. REQ.	DESCRIPTION	PART NUMBERS					
			PUMP MODEL 080510	PUMP MODEL 080512	PUMP MODEL 080515	PUMP MODEL 080520	PUMP MODEL 080612	PUMP MODEL 080614
13	8	BOLT, SEAL COVER	M16 X 50					
14	2	SEAL COVER	955-1714RP					
16	2	MECHANICAL SEAL, UNBALANCED	955-1840RP					
16	2	MECHANICAL SEAL, BALANCED	955-1845RP					
17	2	BUSHING, SEAL	955-1719RP					

COUPLING GUARD PARTS

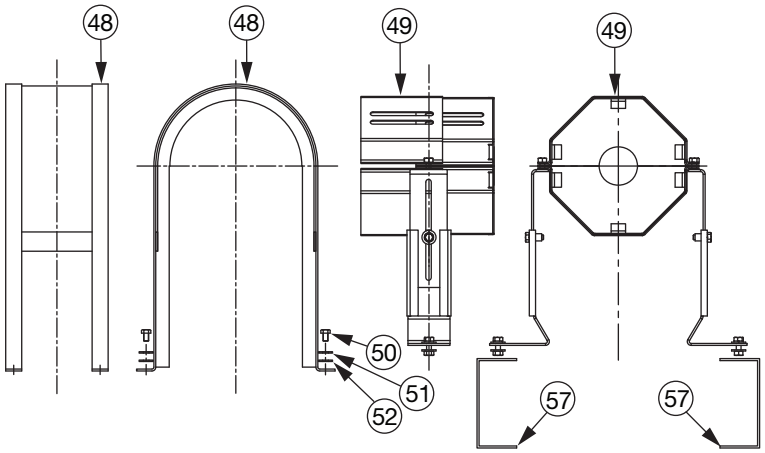

AW-961 REV –

ITEM NO.	QTY. REQ.	DESCRIPTION	PART NUMBERS					
			PUMP MODEL 080510	PUMP MODEL 080512	PUMP MODEL 080515	PUMP MODEL 080520	PUMP MODEL 080612	PUMP MODEL 080614
48	1	STANDARD COUPLING GUARD	955-1728RP					
48	1	STANDARD COUPLING GUARD *	N/A		955-1729RP		N/A	955-1729RP
49	1	OSHA COUPLING GUARD	953-2756RP					
49	1	OSHA COUPLING GUARD **	955-1490RP	N/A				
50	4	SCREW, COUPLING GUARD	M10 X 16					
51	4	LOCKWASHER, COUPLING GUARD	M10					
52	4	WASHER, COUPLING GUARD	M10					
57	2	STAND, OSHA COUPLING GUARD	955-1500RP					
57	2	STAND, OSHA COUPLING GUARD ****	N/A		955-1501RP		N/A	955-1501RP

* THIS COUPLING GUARD IS USED WHEN MOTOR FRAME IS 404T OR GREATER.
** THIS OSHA COUPLING GUARD IS USED WHEN MOTOR FRAME IS 215T OR SMALLER.
**** THIS OSHA COUPLING GUARD STAND IS USED WHEN MOTOR FRAME IS 404T OR LARGER.

BEARING PARTS

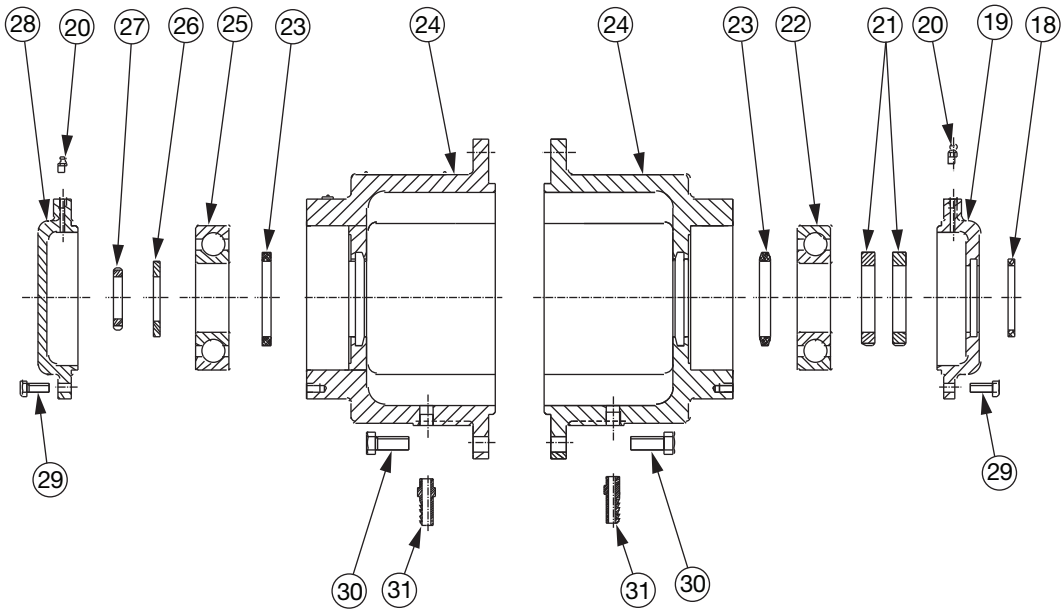

ITEM NO.	QTY. REQ.	DESCRIPTION	PART NUMBERS					
			PUMP MODEL 080510	PUMP MODEL 080512	PUMP MODEL 080515	PUMP MODEL 080520	PUMP MODEL 080612	PUMP MODEL 080614
18	1	SEAL, BEARING COVER	955-1774RP					
19	1	BEARING COVER (DE)	955-1744RP					
20	2	GREASE FITTING	M8 X 1					
21	2	NUT, BEARING RETAINING (DE)	M48 X 1.5					
22	1	BEARING (DE)	955-1766RP					
23	2	SEAL, BEARING HOUSING	955-1769RP					
24	2	BEARING HOUSING	955-1734RP					
25	1	BEARING (NDE)	955-1766RP					
26	1	WASHER, BEARING RETAINING	A63					
27	1	NUT, BEARING RETAINING (NDE)	M30 X 1.5					
28	1	BEARING COVER (NDE)	955-1739RP					
29	8	BOLT, BEARING COVER	M10 X 25					
30	16	BOLT, BEARING HOUSING	M12 X 30					
31	2	HOSE ADAPTER	3/8"					

SHAFT & COUPLER PARTS (page 1 of 3)

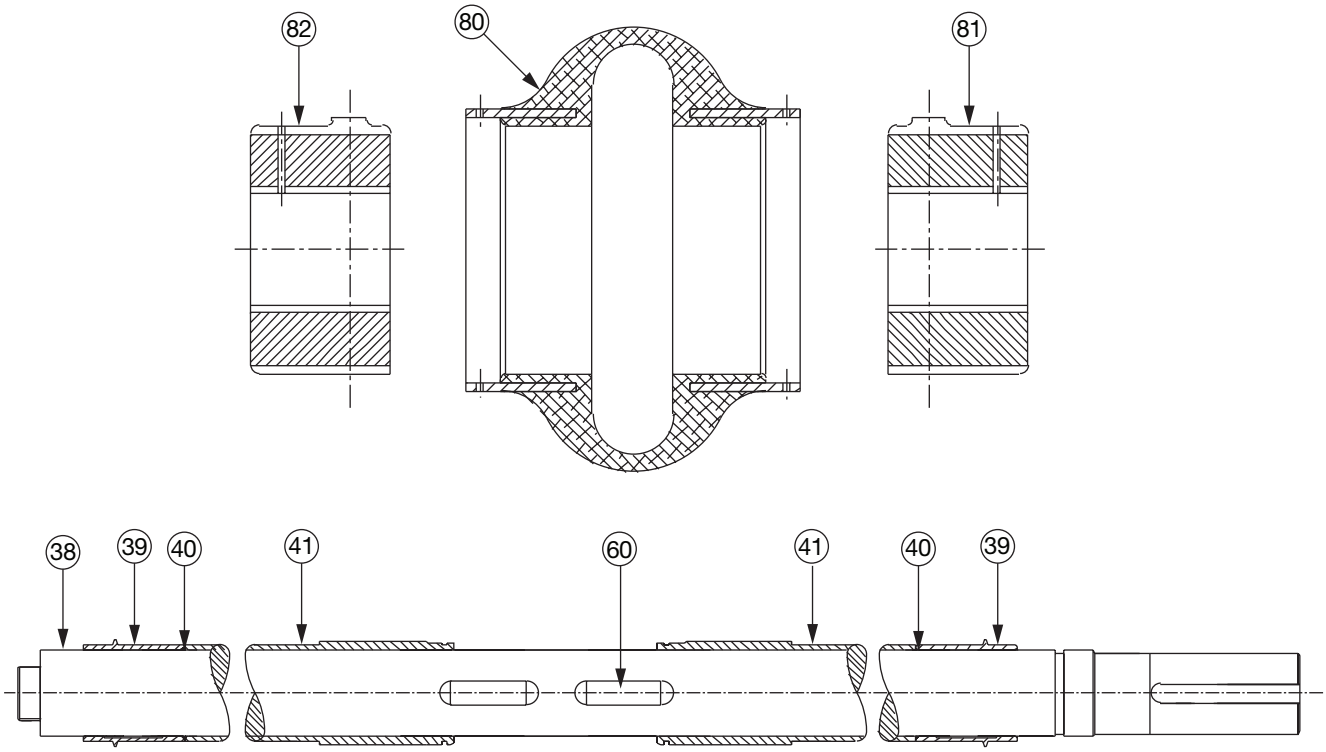

ITEM NO.	QTY. REQ.	DESCRIPTION	PART NUMBERS					
			PUMP MODEL 080510	PUMP MODEL 080512	PUMP MODEL 080515	PUMP MODEL 080520	PUMP MODEL 080612	PUMP MODEL 080614
60	1	IMPELLER KEY	955-1698RP					
38	1	SHAFT KIT CS CW *	955-1664RP					
38	1	SHAFT KIT SS CW *	955-1669RP					
39	2	SPACER BEARING (CI)	955-1688RP					
40	2	O-RING, SLEEVE	955-1671RP					
41	2	SHAFT SLEEVE (BRZ.)	955-1784RP					
41	2	SHAFT SLEEVE (SS)	955-1789RP					

* See back page for CCW shaft kits and kit contents.

SHAFT & COUPLER PARTS (page 2 of 3)

ITEM NO.	QTY. REQ.	DESCRIPTION	PUMP MODEL	NEMA MTR FRAME SIZE							
				215T	254T	256T	284T	286T	324T	326T	364T
80	1	ELEMENT	080510	953-2446RP	953-2446RP	953-2455RP	953-2455RP	953-2455RP	953-2464RP	-	-
			080512	-				953-2464RP		953-2464RP	953-2475RP
			080515	-	-	-				953-2475RP	
			080520	-	-	-	-	-		953-2464RP	
			080612	-	-	953-2455RP	953-2455RP	953-2464RP			
			080614	-	-	-				953-2475RP	
				365T	404T	405T	444T	445T	447T	449T	
80	1	ELEMENT	080510	-	-	-	-	-	-	-	
			080512	-	-	-	-	-	-	-	
			080515	953-2478RP	953-2478RP	953-2478RP	953-2544RP	953-2544RP	-	-	
			080520			953-2544RP			953-2544RP	953-2544RP	
			080612	953-2475RP	-	-	-	-	-	-	
			080614	953-2478RP	953-2478RP	953-2478RP	953-2544RP	953-2544RP	-	-	

ITEM NO.	QTY. REQ.	DESCRIPTION	PUMP MODEL	NEMA MTR FRAME SIZE							
				215T	254T	256T	284T	286T	324T	326T	364T
81	1	HUB, MOTOR	080510	953-2450RP	953-2452RP	953-2460RP	953-2462RP	953-2462RP	953-2472RP	-	-
			080512	-				953-2471RP		953-2472RP	953-2477RP
			080515	-	-	-				953-2539RP	
			080520	-	-	-	-	-		953-2472RP	
			080612	-	-	953-2460RP	953-2462RP	953-2471RP			
			080614	-	-	-				953-2539RP	
				365T	404T	405T	444T	445T	447T	449T	
81	1	HUB, MOTOR	080510	-	-	-	-	-	-	-	
			080512	-	-	-	-	-	-	-	
			080515	953-2542RP	953-2480RP	953-2480RP	953-2549RP	953-2549RP	-	-	
			080520			953-3925RP			953-2549RP	953-2549RP	
			080612	953-2477RP	-	-	-	-	-	-	
			080614	953-2542RP	953-2480RP	953-2480RP	953-2549RP	953-2549RP	-	-	

ITEM NO.	QTY. REQ.	DESCRIPTION	PUMP MODEL	NEMA MTR FRAME SIZE							
				215T	254T	256T	284T	286T	324T	326T	364T
82	1	HUB, PUMP	080510	953-4085RP	953-4085RP	953-4082RP	953-4082RP	953-4082RP	953-4088RP	-	-
			080512	-				953-4088RP		953-4088RP	953-4078RP
			080515	-	-	-				953-4078RP	
			080520	-	-	-	-	-		953-4088RP	
			080612	-	-	953-4082RP	953-4082RP	953-4088RP			
			080614	-	-	-				953-4078RP	
				365T	404T	405T	444T	445T	447T	449T	
82	1	HUB, PUMP	080510	-	-	-	-	-	-	-	
			080512	-	-	-	-	-	-	-	
			080515	953-4079RP	953-4079RP	953-4079RP	953-4091RP	953-4091RP	-	-	
			080520			953-4091RP			953-4091RP	953-4091RP	
			080612	953-4078RP	-	-	-	-	-	-	
			080614	953-4079RP	953-4079RP	953-4079RP	953-4091RP	953-4091RP	-	-	

SHAFT & COUPLER PARTS (page 3 of 3)

ITEM NO.	QTY. REQ.	DESCRIPTION	PUMP MODEL	IEC MTR FRAME SIZE							
				132M	160M	160L	180M	180L	200L	225S	225M
80	1	ELEMENT	080510	953-2446RP	953-2446RP	953-2455RP	-	-	-	-	-
			080512	-			953-2455RP	953-2464RP	953-2464RP	-	-
			080515	-	-	-	-			953-2475RP	953-2475RP
			080520	-	-	-	-	-	-	-	
			080612	-	-	953-2455RP	953-2455RP	953-2464RP	953-2464RP	-	-
			080614	-	-	-	-			953-2475RP	953-2475RP

				250M	280S	280M	315S
80	1	ELEMENT	080510	-	-	-	-
			080512	-	-	-	-
			080515	953-2478RP	953-2478RP	-	-
			080520			953-2544RP	953-2544RP
			080612	-	-	-	-
			080614	953-2478RP	-	-	-

ITEM NO.	QTY. REQ.	DESCRIPTION	PUMP MODEL	IEC MTR FRAME SIZE							
				132M	160M	160L	180M	180L	200L	225S	225M
81	1	HUB, MOTOR	080510	953-3353RP	953-3170RP	953-31D6RP	-	-	-	-	-
			080512	-			953-3102RP	953-3329RP	953-3053RP	-	-
			080515	-	-	-	-			953-3111RP	953-3111RP
			080520	-	-	-	-	-	-	-	
			080612	-	-	953-31D6RP	953-31D2RP	953-3329RP	953-3053RP	-	-
			080614	-	-	-	-			953-3111RP	953-3111RP

				250M	280S	280M	315S
81	1	HUB, MOTOR	080510	-	-	-	-
			080512	-	-	-	-
			080515	953-3118RP	953-3112RP	-	-
			080520			953-3314RP	953-3318RP
			080612	-	-	-	-
			080614	953-3118RP	-	-	-

ITEM NO.	QTY. REQ.	DESCRIPTION	PUMP MODEL	IEC MTR FRAME SIZE							
				132M	160M	160L	180M	180L	200L	225S	225M
82	1	HUB, PUMP	080510	953-4085RP	953-4085RP	953-4082RP	-	-	-	-	-
			080512	-			953-4082RP	953-4088RP	953-4088RP	-	-
			080515	-	-	-	-			953-4078RP	953-4078RP
			080520	-	-	-	-	-	-	-	
			080612	-	-	953-4082RP	953-4082RP	953-4088RP	953-4088RP	-	-
			080614	-	-	-	-			953-4078RP	953-4078RP

				250M	280S	280M	315S
82	1	HUB, PUMP	080510	-	-	-	-
			080512	-	-	-	-
			080515	953-4079RP	953-4079RP	-	-
			080520			953-4091RP	953-4091RP
			080612	-	-	-	-
			080614	953-4079RP	-	-	-

MOTOR PARTS

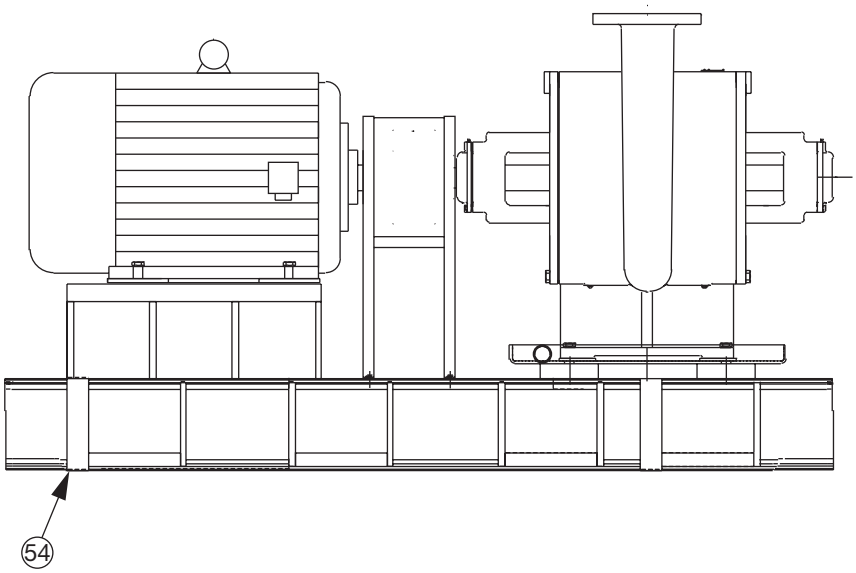

ITEM NO.	QTY. REQ.	DESCRIPTION	PUMP MODEL	IEC MTR FRAME SIZE									
				132M	160M	160L	180M	180L	200L	225S	225M	250M	280S
54	1	BASE, FABRICATED	080510	955-1951RP	955-1952RP	955-1952RP	-	-	-	-	-	-	-
			080512	-	955-1952RP	955-1952RP	955-1953RP	955-1953RP	955-1954RP	-	-	-	-
			080515	-	-	-	-	955-1953RP	955-1954RP	955-1956RP	955-1956RP	955-2004RP	955-2005RP
			080520	-	-	-	-	-	-	-	955-1957RP	955-2006RP	955-2007RP
			080612	-	-	955-1952RP	955-1953RP	955-1953RP	955-1954RP	-	-	-	-
			080614	-	-	-	-	955-1953RP	955-1954RP	955-1956RP	955-1956RP	955-2004RP	-

ITEM NO.	QTY. REQ.	DESCRIPTION	PUMP MODEL	IEC MTR FRAME SIZE	
				280M	315S
54	1	BASE, FABRICATED	080510	-	-
			080512	-	-
			080515	-	-
			080520	955-2007RP	955-2008RP
			080612	-	-
			080614	-	-

ITEM NO.	QTY. REQ.	DESCRIPTION	PUMP MODEL	NEMA MTR FRAME SIZE									
				182T	184T	213T	215T	254T	256T	284T	286T	324T	326T
54	1	BASE, FABRICATED	080510	-	-	-	955-1951RP	955-1952RP	955-1952RP	955-1953RP	955-1953RP	955-1954RP	-
			080512	-	-	-	-	955-1952RP	955-1952RP	955-1953RP	955-1953RP	955-1954RP	955-1954RP
			080515	-	-	-	-	-	-	955-1953RP	955-1953RP	955-1954RP	955-1954RP
			080520	-	-	-	-	-	-	-	-	955-1955RP	955-1955RP
			080612	-	-	-	-	-	955-1952RP	955-1953RP	955-1953RP	955-1954RP	955-1954RP
			080614	-	-	-	-	-	-	955-1953RP	955-1953RP	955-1954RP	955-1954RP

ITEM NO.	QTY. REQ.	DESCRIPTION	PUMP MODEL	NEMA MTR FRAME SIZE							
				364T	365T	404T	405T	444T	445T	447T	449T
54	1	BASE, FABRICATED	080510	-	-	-	-	-	-	-	-
			080512	955-1956RP	-	-	-	-	-	-	-
			080515	955-1956RP	955-1956RP	955-1958RP	955-1958RP	955-1959RP	955-1959RP	-	-
			080520	955-1957RP	955-1957RP	955-1996RP	955-1996RP	955-1997RP	955-1997RP	955-1960RP	955-2352RP
			080612	955-1956RP	955-1956RP	-	-	-	-	-	-
			080614	955-1956RP	955-1956RP	955-1958RP	955-1958RP	955-1959RP	955-1959RP	-	-

NOTE: 1. PARTS NOT IDENTIFIED WITH A BALLOON ARE FOR REFERENCE ONLY.
2. BASE NUMBERS LISTED ARE REPLACEMENTS FOR THE NEW DESIGNS ONLY. IF BASES WERE PURCHASED PRIOR TO 2-1-2012, PLEASE CONTACT TECH SUPPORT TO OBTAIN THE OBSOLETE BASE R.P. LIST.

TC/TS PARTS KITS

PUMP MODEL NUMBER	SHAFT		SHAFT KIT	BEARING RETAINING NUTS AND WASHERS KIT	MECHANICAL SEAL AND SEAL BUSHING KIT	O-RING KIT
TC/TS 080510	CW	CS	955-1664RP	955-2550RP	955-2563RP	955-2539RP
	CCW	CS	955-2407RP	955-2555RP		
	CW	SS	955-1669RP	955-2550RP		
	CCW	SS	955-2406RP	955-2555RP		
TC/TS 080512	CW	CS	955-1664RP	955-2550RP	955-2563RP	955-2539RP
	CCW	CS	955-2407RP	955-2555RP		
	CW	SS	955-1669RP	955-2550RP		
	CCW	SS	955-2406RP	955-2555RP		
TC/TS 080515	CW	CS	955-1664RP	955-2550RP	955-2563RP	955-2539RP
	CCW	CS	955-2407RP	955-2555RP		
	CW	SS	955-1669RP	955-2550RP		
	CCW	SS	955-2406RP	955-2555RP		
TC/TS 080520	CW	CS	955-1664RP	955-2550RP	955-2563RP	955-2539RP
	CCW	CS	955-2407RP	955-2555RP		
	CW	SS	955-1669RP	955-2550RP		
	CCW	SS	955-2406RP	955-2555RP		
TC/TS 080612	CW	CS	955-1664RP	955-2550RP	955-2563RP	955-2539RP
	CCW	CS	955-2407RP	955-2555RP		
	CW	SS	955-1669RP	955-2550RP		
	CCW	SS	955-2406RP	955-2555RP		
TC/TS 080614	CW	CS	955-1664RP	955-2550RP	955-2563RP	955-2539RP
	CCW	CS	955-2407RP	955-2555RP		
	CW	SS	955-1669RP	955-2550RP		
	CCW	SS	955-2406RP	955-2555RP		

LEGEND:
CW - CLOCKWISE
CCW - COUNTER CLOCKWISE
CS - CARBON STEEL
SS - STAINLESS STEEL

TC/TS PARTS KIT CONTENTS			
SHAFT KIT	**BEARING RETAINING NUTS AND WASHERS KIT**	**MECHANICAL SEAL AND SEAL BUSHING KIT**	**O-RING KIT**
Shaft (1)	Nut, DE (2)	Mech. Seal Unbal (1)	O-Ring, Sleeve (2)
O-Ring (2)	Nut, NDE (1)	Seal Bushing (1)	O-Ring, Impeller (2)
Nut, DE (2)	Washer (1)		O-Ring, Seal Cover (2)
Nut, NDE (1)			O-Ring, Casing (2)
O-Ring, Impeller (2)			
O-Ring, Seal Cover (2)			
Washer (1)			

TACO, INC., 1160 Cranston Street, Cranston, RI 02920 Telephone: (401) 942-8000 FAX: (401) 942-2360.
TACO (Canada), Ltd., 8450 Lawson Road, Unit #3, Milton, Ontario L9T 0J8. Telephone: 905/564-9422. FAX: 905/564-9436.
Visit our web site at: http://www.taco-hvac.com

Printed in USA
Copyright 2012
TACO, Inc.