Replacement Parts List

304-451

MODELS TC/TS 060410, TC/TS 060412, TC/TS 060416

SUPERSEDES: August 20, 2012

EFFECTIVE: September 1, 2012

WHEN SELECTING AND ORDERING PARTS, ALWAYS REFER TO SERIAL NUMBER ON NAMEPLATE

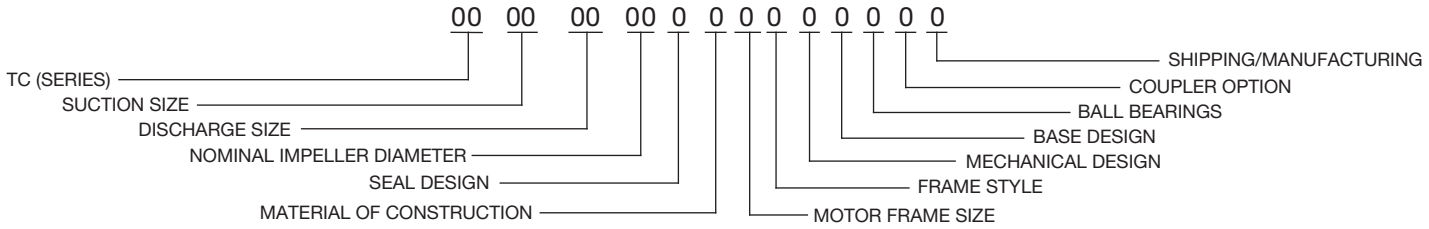

CASING & IMPELLER PARTS

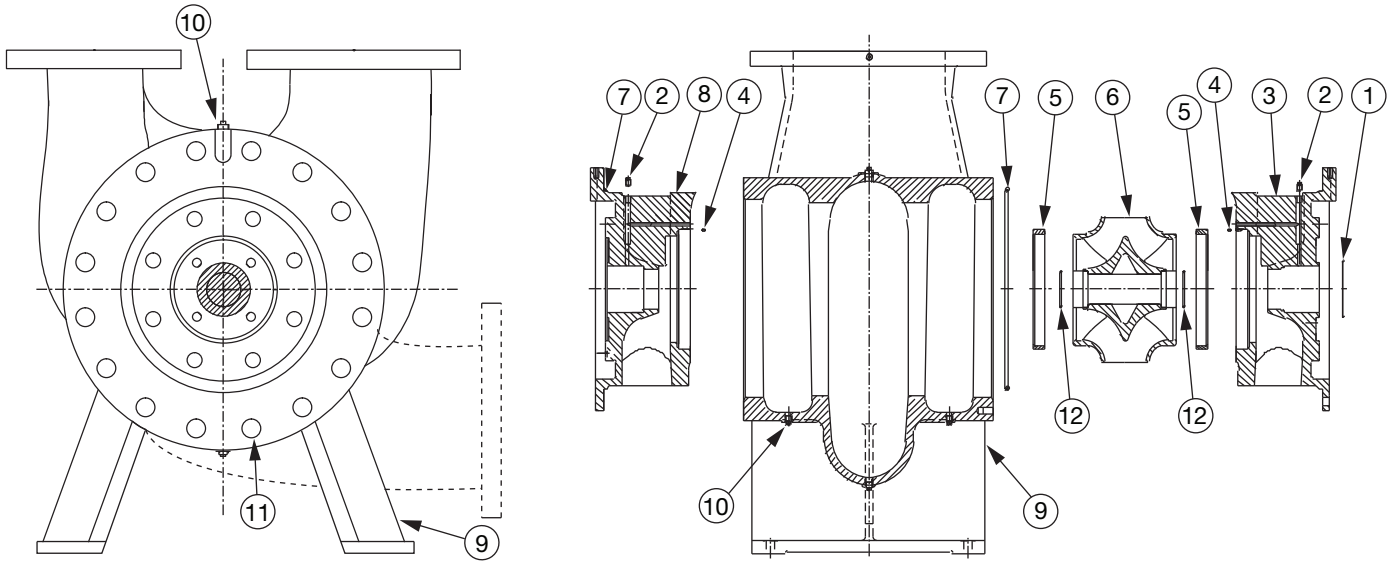

ITEM NO.	QTY. REQ.	DESCRIPTION	PART NUMBERS		
			PUMP MODEL 060410	PUMP MODEL 060412	PUMP MODEL 060416
1	2	O-RING, CASING COVER/SEAL COVER	955-1682RP	955-1683RP	955-1682RP
2	2	DRAIN PLUG, COVER	1/4"		
3	1	COVER B, DRIVE END	955-1579RP	955-1580RP	955-1581RP
4	4	SET SCREW, WEAR RING TO COVER	M6 X 6		
5	2	WEAR RING	955-1600RP	955-1601RP	955-1600RP
6	1	IMPELLER (SS)	955-1614RP	955-1615RP	955-1616RP
6	1	IMPELLER (BRZ)	955-1636RP	955-1637RP	955-1638RP
7	2	O-RING, CASING/COVER	955-1655RP	955-1656RP	955-1655RP
8	1	COVER A, NON-DRIVE END	955-1557RP	955-1558RP	955-1559RP
9	1	CASING (125#)	955-1513RP	955-1514RP	955-1515RP
9	1	CASING (250#)	955-1535RP	955-1536RP	955-1537RP
10	2	DRAIN PLUG, CASING	3/8"		
11	32	BOLT, CASING	M16 X 35	M16 X 40	M16 X 35
12	2	O-RING, IMPELLER/SLEEVE	955-1675RP	955-1676RP	955-1675RP

AW-951 REV -

SEAL PARTS

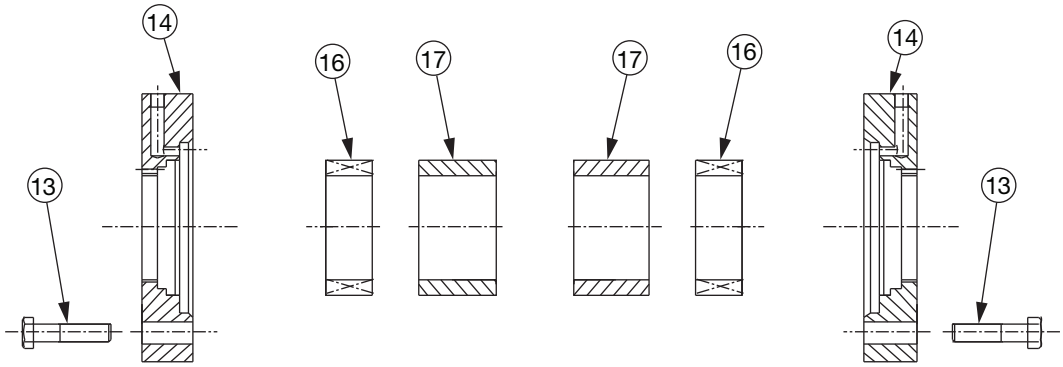

AW-952 REV – B

ITEM NO.	QTY. REQ.	DESCRIPTION	PART NUMBERS		
			PUMP MODEL 060410	PUMP MODEL 060412	PUMP MODEL 060416
13	8	BOLT, SEAL COVER	M12 X 55	M16 X 50	M12 X 55
14	2	SEAL COVER	955-1713RP	955-1714RP	
16	2	MECHANICAL SEAL, UNBALANCED	955-2402RP	955-1840RP	955-2402RP
16	2	MECHANICAL SEAL, BALANCED	955-1844RP	955-1845RP	955-1844RP
17	2	BUSHING, SEAL	955-1718RP	955-1719RP	955-1718RP

COUPLING GUARD PARTS

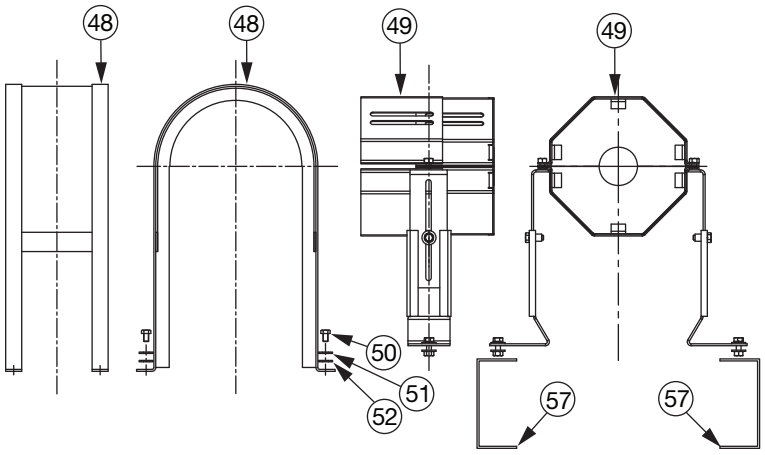

AW-955 REV –

ITEM NO.	QTY. REQ.	DESCRIPTION	PART NUMBERS		
			PUMP MODEL 06D410	PUMP MODEL 06D412	PUMP MODEL 06D416
48	1	STANDARD COUPLING GUARD	955-1727RP	955-1728RP	
49	1	OSHA COUPLING GUARD	953-2756RP		
49	1	OSHA COUPLING GUARD **	955-1490RP	–	955-1490RP
50	4	SCREW, COUPLING GUARD	M10 X 16		
51	4	LOCKWASHER, COUPLING GUARD	M10		
52	4	WASHER, COUPLING GUARD	M10		
57	2	STAND, OSHA COUPLING GUARD	955-1489RP	955-1500RP	

**THIS OSHA COUPLING GUARD IS USED WHEN MOTOR FRAME IS 215T OR SMALLER.

BEARING PARTS

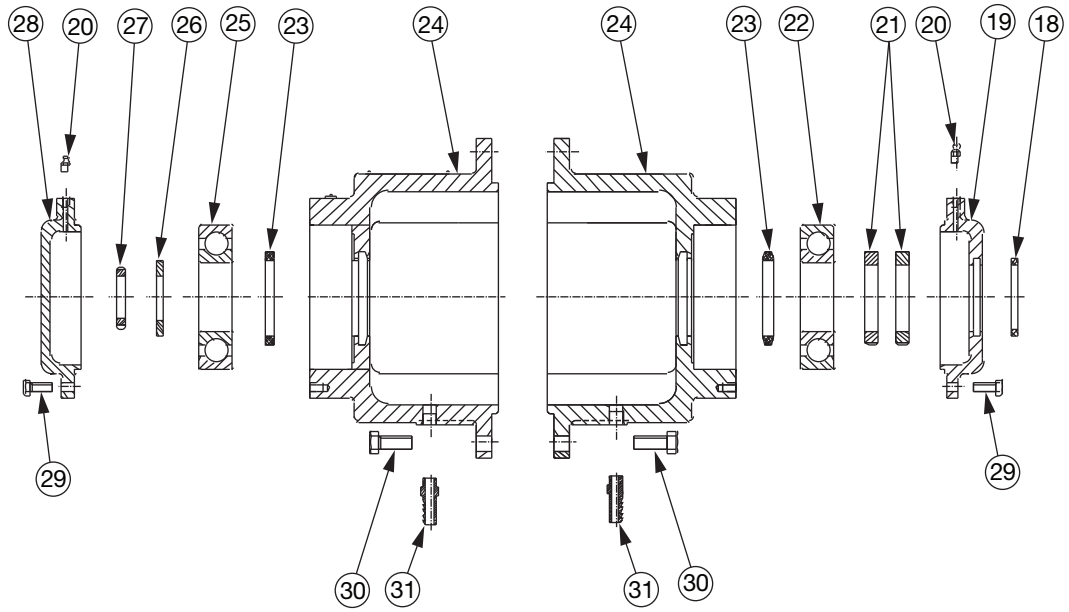

ITEM NO.	QTY. REQ.	DESCRIPTION	PART NUMBERS		
			PUMP MODEL 060410	PUMP MODEL 060412	PUMP MODEL 060416
18	1	SEAL, BEARING COVER	955-1773RP	955-1774RP	955-1773RP
19	1	BEARING COVER (DE)	955-1743RP	955-1744RP	955-1743RP
20	2	GREASE FITTING	M8 X 1		
21	2	NUT, BEARING RETAINING (DE)	M39 X 1.5	M48 X 1.5	M39 X 1.5
22	1	BEARING (DE)	862-101RP	951-155RP	862-101RP
23	2	SEAL, BEARING HOUSING	955-1768RP	955-1769RP	955-1768RP
24	2	BEARING HOUSING	955-1733RP	955-1734RP	955-1733RP
25	1	BEARING (NDE)	862-101RP	951-155RP	862-101RP
26	1	WASHER, BEARING RETAINING	A50	A63	A50
27	1	NUT, BEARING RETAINING (NDE)	M25 X 1.5	M30 X 1.5	M25 X 1.5
28	1	BEARING COVER (NDE)	955-1738RP	955-1739RP	955-1738RP
29	8	BOLT, BEARING COVER	M10 X 25		
30	16	BOLT, BEARING HOUSING	M12 X 30		
31	2	HOSE ADAPTER	3/8"		

AW-953 REV – A

SHAFT & COUPLER PARTS (page 1 of 2)

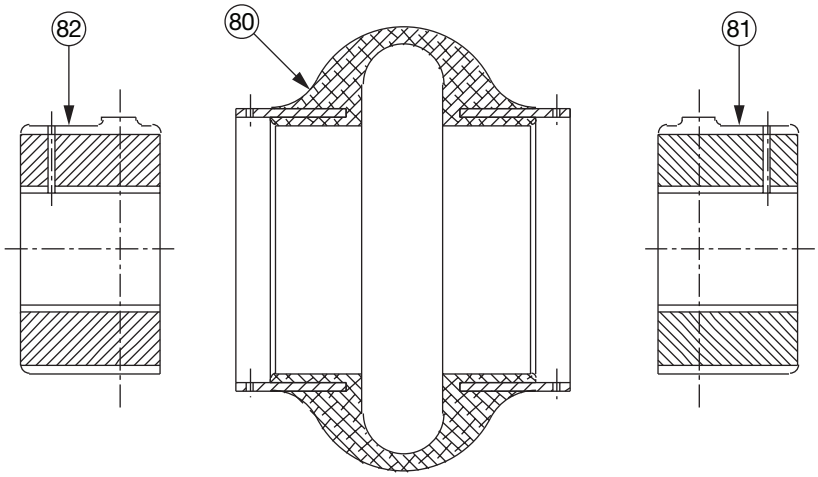

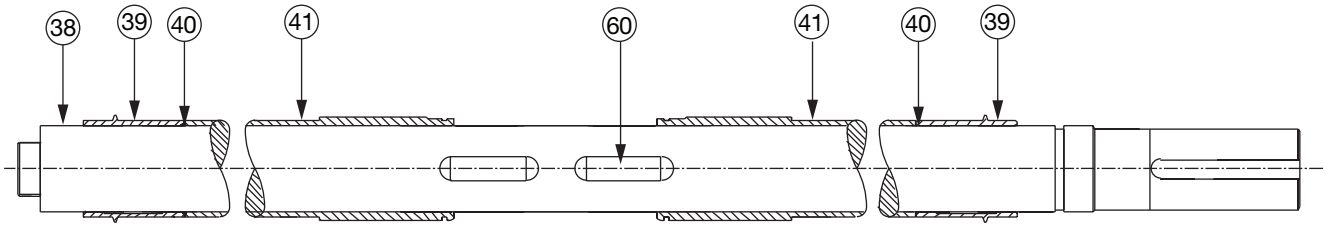

ITEM NO.	QTY. REQ.	DESCRIPTION	PART NUMBERS		
			PUMP MODEL 060410	PUMP MODEL 060412	PUMP MODEL 060416
60	1	IMPELLER KEY	955-1697RP	955-1698RP	955-1697RP
38	1	SHAFT KIT CS CW *	955-1663RP	955-1664RP	955-1663RP
38	1	SHAFT KIT SS CW *	955-1668RP	955-1669RP	955-1668RP
39	2	SPACER BEARING (CI)	955-1687RP	955-1688RP	955-1687RP
40	2	O-RING, SLEEVE	955-1670RP	955-1671RP	955-1670RP
41	2	SHAFT SLEEVE (BRZ.)	955-1783RP	955-1784RP	955-1783RP
41	2	SHAFT SLEEVE (SS)	955-1788RP	955-1789RP	955-1788RP

* See back page for CCW shaft kits and kit contents.

SHAFT & COUPLER PARTS (page 2 of 2)

ITEM NO.	QTY. REQ.	DESCRIPTION	PUMP MODEL	IEC MTR FRAME SIZE					
				132S	132M	160M	160L	180M	180L
80	1	ELEMENT	060410	953-2438RP	953-2438RP	953-2446RP	953-2455RP	-	-
			060412	-	953-2446RP			953-2455RP	953-2464RP
			060416	-	-	-			
				200L	225S				
80	1	ELEMENT	060410	-	-				
			060412	-	-				
			060416	953-2464RP	953-2475RP				

ITEM NO.	QTY. REQ.	DESCRIPTION	PUMP MODEL	IEC MTR FRAME SIZE					
				132S	132M	160M	160L	180M	180L
81	1	HUB, MOTOR	060410	953-3103RP	953-3103RP	953-3170RP	953-3106RP	-	-
			060412	-	953-3353RP			953-3102RP	953-3329RP
			060416	-	-	-			
				200L	225S				
81	1	HUB, MOTOR	060410	-	-				
			060412	-	-				
			060416	953-3053RP	953-3111RP				

ITEM NO.	QTY. REQ.	DESCRIPTION	PUMP MODEL	IEC MTR FRAME SIZE					
				132S	132M	160M	160L	180M	180L
82	1	HUB, PUMP	060410	953-4083RP	953-4083RP	953-4084RP	953-4086RP	-	-
			060412	-	953-4085RP	953-4085RP	953-4082RP	953-4082RP	953-4088RP
			060416	-	-	-	953-4082RP	953-4082RP	953-4088RP
				200L	225S				
82	1	HUB, PUMP	060410	-	-				
			060412	-	-				
			060416	953-4088RP	953-4078RP				

ITEM NO.	QTY. REQ.	DESCRIPTION	PUMP MODEL	NEMA MTR FRAME SIZE					
				213T	215T	254T	256T	284T	286T
80	1	ELEMENT	060410	953-2438RP	953-2438RP	953-2446RP	953-2455RP	953-2455RP	953-2455RP
			060412	-	953-2446RP				953-2464RP
			060416	-	-	-			
				324T	326T	364T	365T	404T	405T
80	1	ELEMENT	060410	-	-	-	-	-	-
			060412	953-2464RP	953-2464RP	953-2475RP	-	-	-
			060416				953-2475RP	953-2478RP	953-2478RP

ITEM NO.	QTY. REQ.	DESCRIPTION	PUMP MODEL	NEMA MTR FRAME SIZE					
				213T	215T	254T	256T	284T	286T
81	1	HUB, MOTOR	060410	953-2443RP	953-2443RP	953-2452RP	953-2460RP	953-2462RP	953-2462RP
			060412	-	953-2450RP				953-2471RP
			060416	-	-	-			
				324T	326T	364T	365T	404T	405T
81	1	HUB, MOTOR	060410	-	-	-	-	-	-
			060412	953-2472RP	953-2472RP	953-2477RP	-	-	-
			060416				953-2477RP	953-2480RP	953-2480RP

ITEM NO.	QTY. REQ.	DESCRIPTION	PUMP MODEL	NEMA MTR FRAME SIZE					
				213T	215T	254T	256T	284T	286T
82	1	HUB, PUMP	060410	953-4083RP	953-4083RP	953-4084RP	953-4086RP	953-4086RP	953-4086RP
			060412	-	953-4085RP	953-4085RP	953-4082RP	953-4082RP	953-4088RP
			060416	-	-	-	953-4086RP	953-4086RP	953-4087RP
				324T	326T	364T	365T	404T	405T
82	1	HUB, PUMP	060410	-	-	-	-	-	-
			060412	953-4088RP	953-4088RP	953-4078RP	-	-	-
			060416	953-4087RP	953-4087RP	953-4089RP	953-4089RP	953-4090RP	953-4090RP

MOTOR PARTS

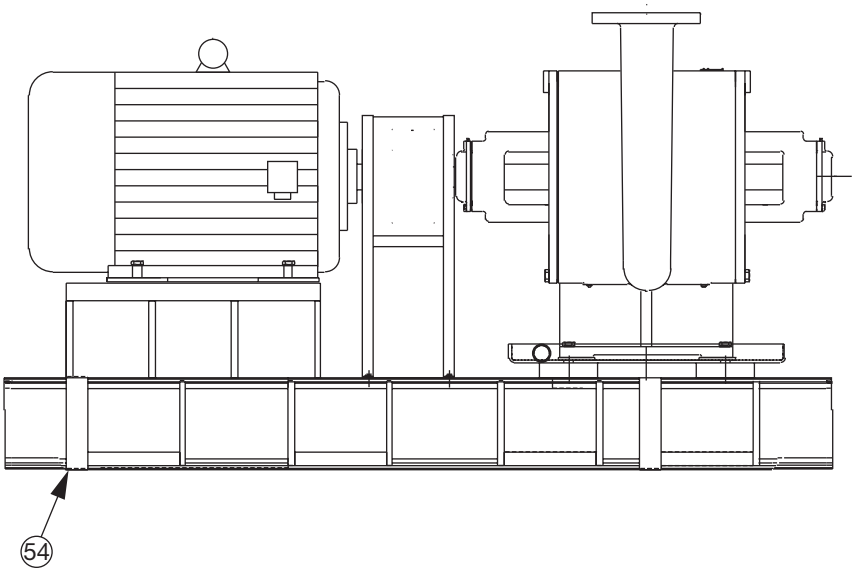

ITEM NO.	QTY. REQ.	DESCRIPTION	PUMP MODEL	IEC MTR FRAME SIZE							
				132S	132M	160M	160L	180M	180L	200L	225S
54	1	BASE, FABRICATED	06D410	955-1942RP	955-1942RP	955-1944RP	955-1944RP	-	-	-	-
			06D412	-	955-1951RP	955-1952RP	955-1952RP	955-1953RP	955-1953RP	-	-
			06D416	-	-	-	955-1994RP	955-1995RP	955-1995RP	955-1948RP	955-1949RP

ITEM NO.	QTY. REQ.	DESCRIPTION	PUMP MODEL	NEMA MTR FRAME SIZE							
				213T	215T	254T	256T	284T	286T	324T	326T
54	1	BASE, FABRICATED	06D410	955-1942RP	955-1942RP	955-1944RP	955-1944RP	955-1946RP	955-1946RP	-	-
			06D412	-	955-1951RP	955-1952RP	955-1952RP	955-1953RP	955-1953RP	955-1954RP	955-1954RP
			06D416	-	-	-	955-1994RP	955-1995RP	955-1995RP	955-1948RP	955-1948RP

ITEM NO.	QTY. REQ.	DESCRIPTION	PUMP MODEL	NEMA MTR FRAME SIZE			
				364T	365T	404T	405T
54	1	BASE, FABRICATED	06D410	-	-	-	-
			06D412	955-1956RP	-	-	-
			06D416	955-1949RP	955-1949RP	955-1950RP	955-1950RP

AW-956 REV – A

NOTE: 1. PARTS NOT IDENTIFIED WITH A BALLOON ARE FOR REFERENCE ONLY.
2. BASE NUMBERS LISTED ARE REPLACEMENTS FOR THE NEW DESIGNS ONLY. IF BASES WERE PURCHASED PRIOR TO 2-1-2012, PLEASE CONTACT TECH SUPPORT TO OBTAIN THE OBSOLETE BASE R.P. LIST.

TC/TS PARTS KITS

PUMP MODEL NUMBER	SHAFT		SHAFT KIT	BEARING RETAINING NUTS AND WASHERS KIT	MECHANICAL SEAL AND SEAL BUSHING KIT	O-RING KIT
TC/TS 060410	CW	CS	955-1663RP	955-2549RP	955-2562RP	955-2538RP
	CCW	CS	955-2417RP	955-2554RP		
	CW	SS	955-1668RP	955-2549RP		
	CCW	SS	955-2421RP	955-2554RP		
TC/TS 060412	CW	CS	955-1664RP	955-2550RP	955-2563RP	955-2539RP
	CCW	CS	955-2407RP	955-2555RP		
	CW	SS	955-1669RP	955-2550RP		
	CCW	SS	955-2406RP	955-2555RP		
TC/TS 060416	CW	CS	955-1663RP	955-2549RP	955-2562RP	955-2538RP
	CCW	CS	955-2417RP	955-2554RP		
	CW	SS	955-1668RP	955-2549RP		
	CCW	SS	955-2421RP	955-2554RP		

LEGEND: CW - CLOCKWISE
CCW - COUNTER CLOCKWISE
CS - CARBON STEEL
SS - STAINLESS STEEL

TC/TS PARTS KIT CONTENTS			
SHAFT KIT	BEARING RETAINING NUTS AND WASHERS KIT	MECHANICAL SEAL AND SEAL BUSHING KIT	O-RING KIT
Shaft (1)	Nut, DE (2)	Mech. Seal Unbal (1)	O-Ring, Sleeve (2)
O-Ring (2)	Nut, NDE (1)	Seal Bushing (1)	O-Ring, Impeller (2)
Nut, DE (2)	Washer (1)		O-Ring, Seal Cover (2)
Nut, NDE (1)			O-Ring, Casing (2)
O-Ring, Impeller (2)			
O-Ring, Seal Cover (2)			
Washer (1)			

TACO, INC., 1160 Cranston Street, Cranston, RI 02920 Telephone: (401) 942-8000 FAX: (401) 942-2360.
TACO (Canada), Ltd., 8450 Lawson Road, Unit #3, Milton, Ontario L9T 0J8. Telephone: 905/564-9422. FAX: 905/564-9436.
Visit our web site at: http://www.taco-hvac.com

Printed in USA
Copyright 2012
TACO, Inc.