Replacement Parts List

304-450

MODELS TC/TS 050308, TC/TS 050310, TC/TS 050314

SUPERSEDES: August 20, 2012

EFFECTIVE: September 1, 2012

WHEN SELECTING AND ORDERING PARTS, ALWAYS REFER TO SERIAL NUMBER ON NAMEPLATE

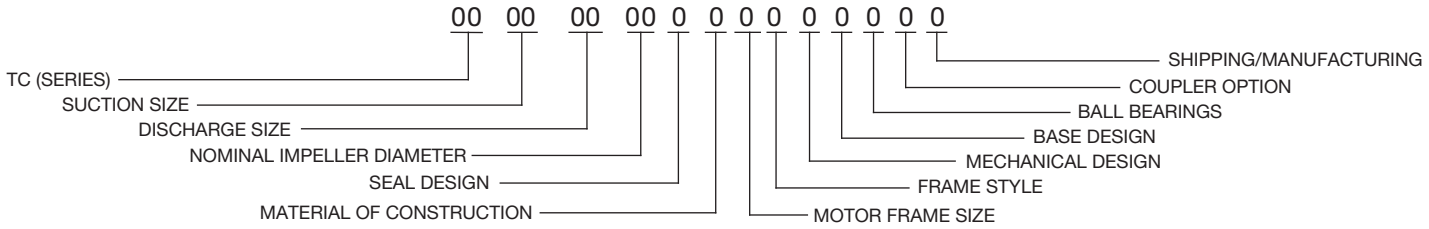

CASING & IMPELLER PARTS

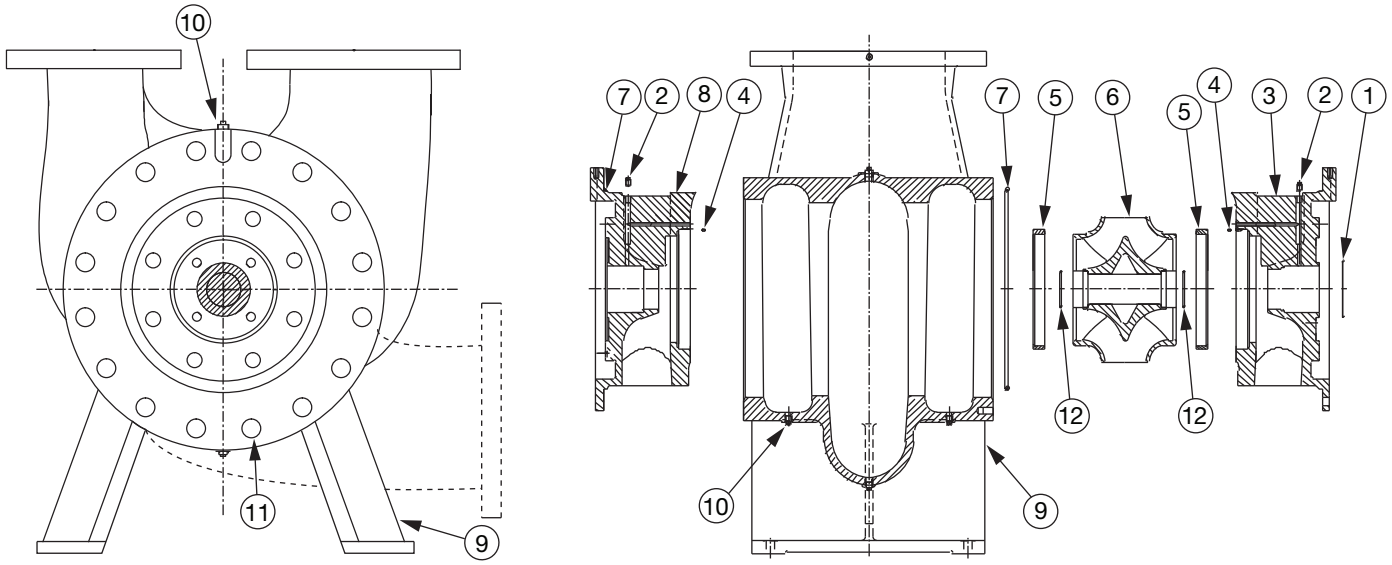

ITEM NO.	QTY. REQ.	DESCRIPTION	PART NUMBERS		
			PUMP MODEL 050308	PUMP MODEL 050310	PUMP MODEL 050314
1	2	O-RING, CASING COVER/SEAL COVER	955-1682RP		
2	2	DRAIN PLUG, COVER	1/4"		
3	1	COVER B, DRIVE END	955-1576RP	955-1577RP	955-1578RP
4	4	SET SCREW, WEAR RING TO COVER	M6 X 6		
5	2	WEAR RING	955-1598RP	955-1599RP	955-1598RP
6	1	IMPELLER (SS)	955-1611RP	955-1612RP	955-1613RP
6	1	IMPELLER (BRZ)	955-1633RP	955-1634RP	955-1635RP
7	2	O-RING, CASING/COVER	955-1655RP		
8	1	COVER A, NON-DRIVE END	955-1554RP	955-1555RP	955-1556RP
9	1	CASING (125#)	955-1510RP	955-1511RP	955-1512RP
9	1	CASING (250#)	955-1532RP	955-1533RP	955-1534RP
10	2	DRAIN PLUG, CASING	3/8"		
11	24	BOLT, CASING	M16 X 35	M12 X 35	M16 X 35 (QTY. 16)
12	2	O-RING, IMPELLER/SLEEVE	955-1675RP		

SEAL PARTS

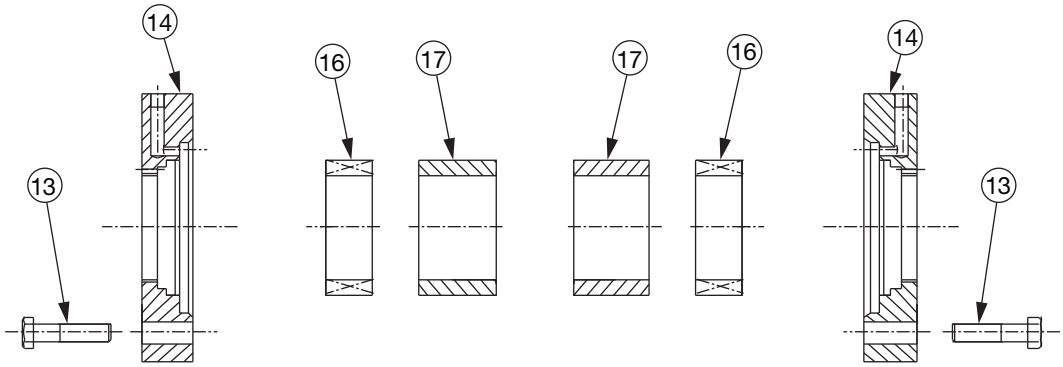

AW-946 REV –B

ITEM NO.	QTY. REQ.	DESCRIPTION	PART NUMBERS		
			PUMP MODEL 050308	PUMP MODEL 050310	PUMP MODEL 050314
13	8	BOLT, SEAL COVER	M12 X 55		
14	2	SEAL COVER	955–1713RP		
16	2	MECHANICAL SEAL, UNBALANCED	955–2402RP		
16	2	MECHANICAL SEAL, BALANCED	955–1844RP		
17	2	BUSHING, SEAL	955–1718RP		

COUPLING GUARD PARTS

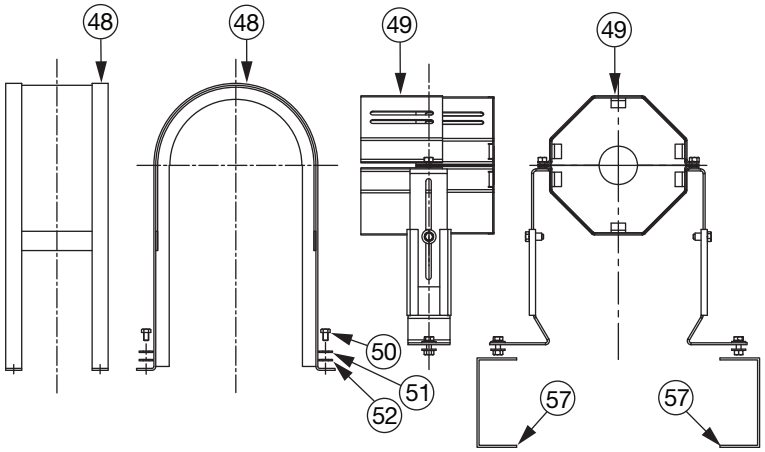

AW-949 REV –

ITEM NO.	QTY. REQ.	DESCRIPTION	PART NUMBERS		
			PUMP MODEL 050308	PUMP MODEL 050310	PUMP MODEL 050314
48	1	STANDARD COUPLING GUARD	955–1725RP	955–1726RP	
49	1	OSHA COUPLING GUARD	955–1499RP	955–1490RP	953–2756RP
49	1	OSHA COUPLING GUARD **	–		955–1490RP
50	4	SCREW, COUPLING GUARD	M10 X 16		
51	4	LOCKWASHER, COUPLING GUARD	M10		
52	4	WASHER, COUPLING GUARD	M10		
57	2	SUPPORT STAND, OSHA COUPLING GUARD	955–1488RP		

**THIS OSHA COUPLING GUARD IS USED WHEN MOTOR FRAME IS 215T OR SMALLER.

BEARING PARTS

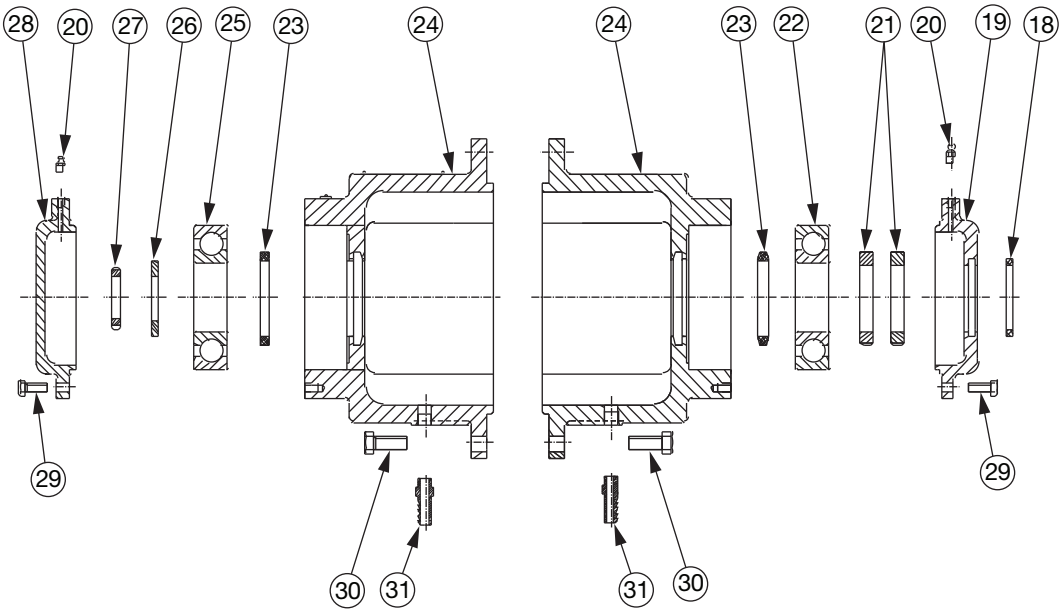

ITEM NO.	QTY. REQ.	DESCRIPTION	PART NUMBERS		
			PUMP MODEL 050308	PUMP MODEL 050310	PUMP MODEL 050314
18	1	SEAL, BEARING COVER	955-1773RP		
19	1	BEARING COVER (DE)	955-1743RP		
20	2	GREASE FITTING	M8 X 1		
21	2	NUT, BEARING RETAINING (DE)	M39 X 1.5		
22	1	BEARING (DE)	862-101RP		
23	2	SEAL, BEARING HOUSING	M50 X 180 X 6		
24	2	BEARING HOUSING	955-1733RP		
25	1	BEARING (NDE)	862-101RP		
26	1	WASHER, BEARING RETAINING	A50		
27	1	NUT, BEARING RETAINING (NDE)	M25 X 1.5		
28	1	BEARING COVER (NDE)	955-1738RP		
29	8	BOLT, BEARING COVER	M10 X 25		
30	16	BOLT, BEARING HOUSING	M12 X 30		
31	2	HOSE ADAPTER	3/8"		

AW-947 REV – A

SHAFT & COUPLER PARTS (page 1 of 2)

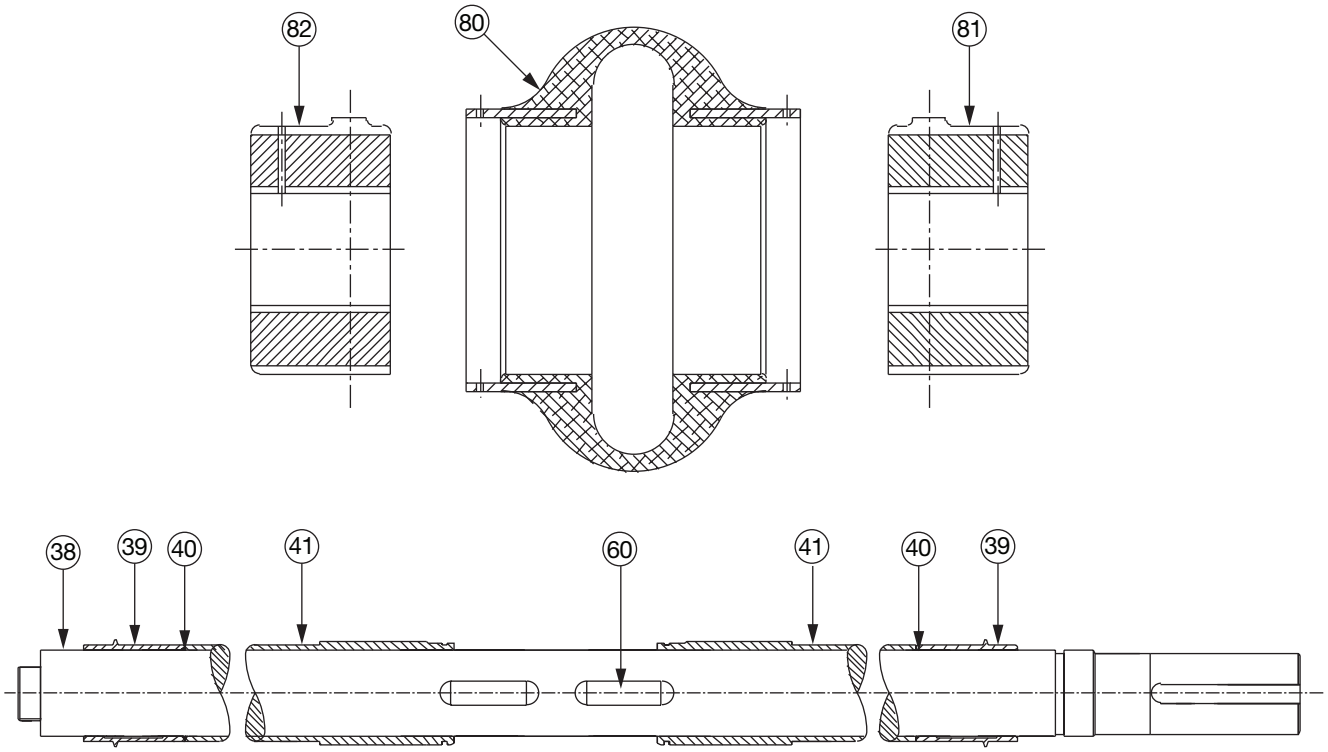

ITEM NO.	QTY. REQ.	DESCRIPTION	PART NUMBERS		
			PUMP MODEL 050308	PUMP MODEL 050310	PUMP MODEL 050314
60	1	IMPELLER KEY	955-1697RP		
38	1	SHAFT KIT CS CW *	955-1663RP		
38	1	SHAFT KIT SS CW *	955-1668RP		
39	2	SPACER BEARING (CI)	955-1687RP		
40	2	O-RING, SLEEVE	955-1670RP		
41	2	SHAFT SLEEVE (BRZ.)	955-1783RP		
41	2	SHAFT SLEEVE (SS)	955-1788RP		

* See back page for CCW shaft kits and kit contents.

AW-948 REV – C (1 of 2)

SHAFT & COUPLER PARTS (page 2 of 2)

ITEM NO.	QTY. REQ.	DESCRIPTION	PUMP MODEL	IEC MTR FRAME SIZE					
				100L	112M	132S	132M	160M	160L
80	1	ELEMENT	050308	953-2438RP	953-2438RP	-	-	-	-
			050310	-	953-2438RP	953-2438RP	953-2438RP	953-2446RP	-
			050314	-	-	-	953-2438RP	953-2446RP	953-2455RP
				180M	180L				
80	1	ELEMENT	050308	-	-				
			050310	-	-				
			050314	953-2455RP	953-2464RP				

ITEM NO.	QTY. REQ.	DESCRIPTION	PUMP MODEL	IEC MTR FRAME SIZE					
				100L	112M	132S	132M	160M	160L
81	1	HUB, MOTOR	050308	953-3355RP	955-3355RP	-	-	-	-
			050310	-	953-3355RP	953-3103RP	953-3103RP	953-3170RP	-
			050314	-	-	-	953-3103RP	953-3170RP	953-3106RP
				180M	180L				
81	1	HUB, MOTOR	050308	-	-				
			050310	-	-				
			050314	953-3102RP	953-3329RP				

ITEM NO.	QTY. REQ.	DESCRIPTION	PUMP MODEL	IEC MTR FRAME SIZE					
				100L	112M	132S	132M	160M	160L
82	1	HUB, PUMP	050308	953-4083RP	953-4083RP	-	-	-	-
			050310	-	953-4083RP	953-4083RP	953-4083RP	953-4084RP	-
			050314	-	-	-	953-4083RP	953-4084RP	953-4086RP
				180M	180L				
82	1	HUB, PUMP	050308	-	-				
			050310	-	-				
			050314	953-4086RP	953-4087RP				

ITEM NO.	QTY. REQ.	DESCRIPTION	PUMP MODEL	NEMA MTR FRAME SIZE					
				145T	182T	184T	213T	215T	254T
80	1	ELEMENT	050308	953-2438RP	953-2438RP	953-2438RP	953-2438RP	953-2438RP	-
			050310	-	-	953-2438RP	953-2438RP	953-2438RP	953-2446RP
			050314	-	-	-	-	953-2438RP	953-2446RP
				256T	284T	286T	324T	326T	
80	1	ELEMENT	050308	-	-	-	-	-	
			050310	953-2446RP	-	-	-	-	
			050314	953-2455RP	953-2455RP	953-2464RP	953-2464RP	953-2464RP	

ITEM NO.	QTY. REQ.	DESCRIPTION	PUMP MODEL	NEMA MTR FRAME SIZE					
				145T	182T	184T	213T	215T	254T
81	1	HUB, MOTOR	050308	953-2439RP	953-2441RP	953-2441RP	953-2443RP	953-2443RP	-
			050310	-	-	953-2441RP	953-2443RP	953-2443RP	953-4084RP
			050314	-	-	-	-	953-2443RP	953-2452RP
				256T	284T	286T	324T	326T	
81	1	HUB, MOTOR	050308	-	-	-	-	-	
			050310	953-4084RP	-	-	-	-	
			050314	953-2460RP	953-2462RP	953-2471RP	953-2472RP	953-2472RP	

ITEM NO.	QTY. REQ.	DESCRIPTION	PUMP MODEL	NEMA MTR FRAME SIZE					
				145T	182T	184T	213T	215T	254T
82	1	HUB, PUMP	050308	953-4083RP	953-4083RP	953-4083RP	953-4083RP	953-4083RP	-
			050310	-	-	953-4083RP	953-4083RP	953-4083RP	953-2452RP
			050314	-	-	-	-	953-4083RP	953-4084RP
				256T	284T	286T	324T	326T	
82	1	HUB, PUMP	050308	-	-	-	-	-	
			050310	953-2452RP	-	-	-	-	
			050314	953-4086RP	953-4086RP	953-4087RP	953-4087RP	953-4087RP	

MOTOR PARTS

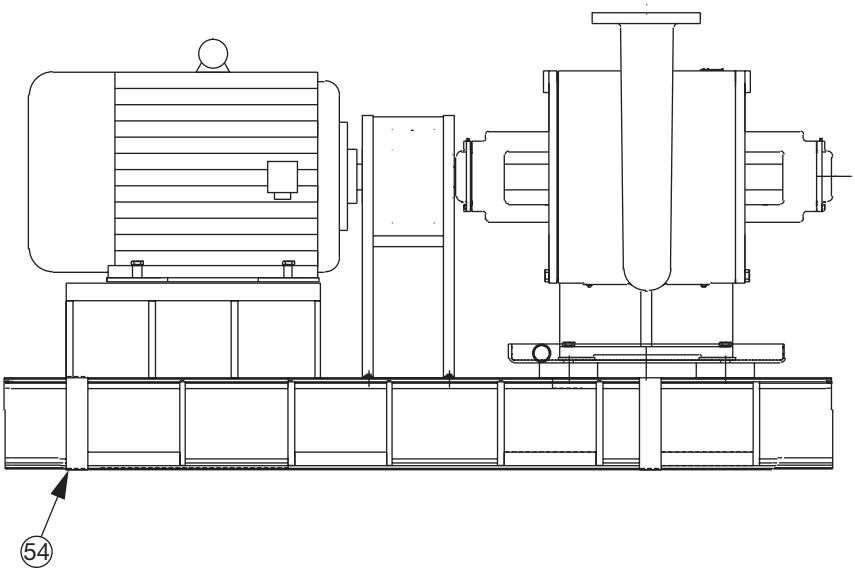

ITEM NO.	QTY. REQ.	DESCRIPTION	PUMP MODEL	IEC MTR FRAME SIZE							
				100L	112M	132S	132M	160M	160L	180M	180L
54	1	BASE, FABRICATED	050308	955-2003RP	955-1940RP	-	-	-	-	-	-
			050310	-	955-1940RP	955-1941RP	955-1941RP	955-1943RP	-	-	-
			050314	-	-		955-1941RP	955-1943RP	955-1943RP	955-1945RP	955-1945RP

ITEM NO.	QTY. REQ.	DESCRIPTION	PUMP MODEL	NEMA MTR FRAME SIZE							
				143T	145T	182T	184T	213T	215T	254T	256T
54	1	BASE, FABRICATED	050308	-	955-1939RP	955-1940RP	955-1940RP	955-1941RP	955-1941RP	-	-
			050310	-	-	-	955-1940RP	955-1941RP	955-1941P	955-1943RP	955-1943RP
			050314	-	-	-	-	-	955-1941P	955-1943RP	955-1943RP

ITEM NO.	QTY. REQ.	DESCRIPTION	PUMP MODEL	NEMA MTR FRAME SIZE			
				284T	286T	324T	326T
54	1	BASE, FABRICATED	050308	-	-	-	-
			050310	-	-	-	-
			050314	955-1945RP	955-1945RP	955-1947RP	955-1947RP

AW-950 REV – A

NOTE: 1. PARTS NOT IDENTIFIED WITH A BALLOON ARE FOR REFERENCE ONLY.
2. BASE NUMBERS LISTED ARE REPLACEMENTS FOR THE NEW DESIGNS ONLY. IF BASES WERE PURCHASED PRIOR TO 2-1-2012, PLEASE CONTACT TECH SUPPORT TO OBTAIN THE OBSOLETE BASE R.P. LIST.

TC/TS PARTS KITS

PUMP MODEL NUMBER	SHAFT		SHAFT KIT	BEARING RETAINING NUTS AND WASHERS KIT	MECHANICAL SEAL AND SEAL BUSHING KIT	O-RING KIT
TC/TS 050308	CW	CS	955-1663RP	955-2549RP	955-2562RP	955-2538RP
	CCW	CS	955-2417RP	955-2554RP		
	CW	SS	955-1668RP	955-2549RP		
	CCW	SS	955-2421RP	955-2554RP		
TC/TS 050310	CW	CS	955-1663RP	955-2549RP	955-2562RP	955-2538RP
	CCW	CS	955-2417RP	955-2554RP		
	CW	SS	955-1668RP	955-2549RP		
	CCW	SS	955-2421RP	955-2554RP		
TC/TS 050314	CW	CS	955-1663RP	955-2549RP	955-2562RP	955-2538RP
	CCW	CS	955-2417RP	955-2554RP		
	CW	SS	955-1668RP	955-2549RP		
	CCW	SS	955-2421RP	955-2554RP		

LEGEND:
CW - CLOCKWISE
CCW - COUNTER CLOCKWISE
CS - CARBON STEEL
SS - STAINLESS STEEL

TC/TS PARTS KIT CONTENTS			
SHAFT KIT	**BEARING RETAINING NUTS AND WASHERS KIT**	**MECHANICAL SEAL AND SEAL BUSHING KIT**	**O-RING KIT**
Shaft (1)	Nut, DE (2)	Mech. Seal Unbal (1)	O-Ring, Sleeve (2)
O-Ring (2)	Nut, NDE (1)	Seal Bushing (1)	O-Ring, Impeller (2)
Nut, DE (2)	Washer (1)		O-Ring, Seal Cover (2)
Nut, NDE (1)			O-Ring, Casing (2)
O-Ring, Impeller (2)			
O-Ring, Seal Cover (2)			
Washer (1)			

TACO, INC., 1160 Cranston Street, Cranston, RI 02920 Telephone: (401) 942-8000 FAX: (401) 942-2360.
TACO (Canada), Ltd., 8450 Lawson Road, Unit #3, Milton, Ontario L9T 0J8. Telephone: 905/564-9422. FAX: 905/564-9436.
Visit our web site at: http://www.taco-hvac.com

Printed in USA
Copyright 2012
TACO, Inc.