Submittal Data Information
FI Series Pumps

301-2402

EFFECTIVE: MARCH 1, 2013 | SUPERSEDES: NEW | 1160 RPM MODEL 1209C

JOB _____ ENGINEER _____

CONTRACTOR _____ REP. _____

ITEM NO.	MODEL NO.	IMPELLER DIA.	G.P.M.	HEAD/FT.	H.P.	ELEC. CHAR.

WEIGHT _____ PUMP/MOTOR _____

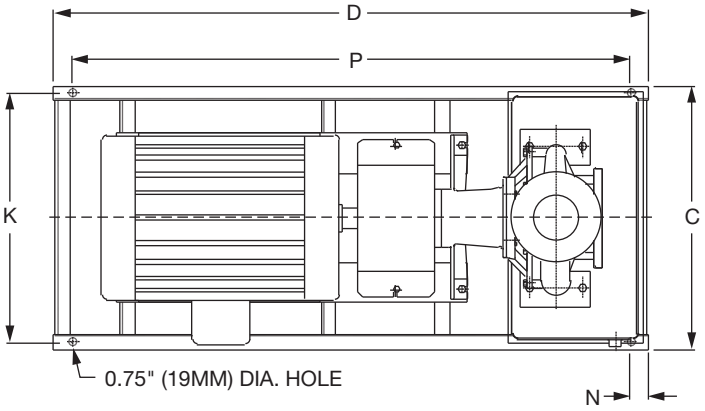

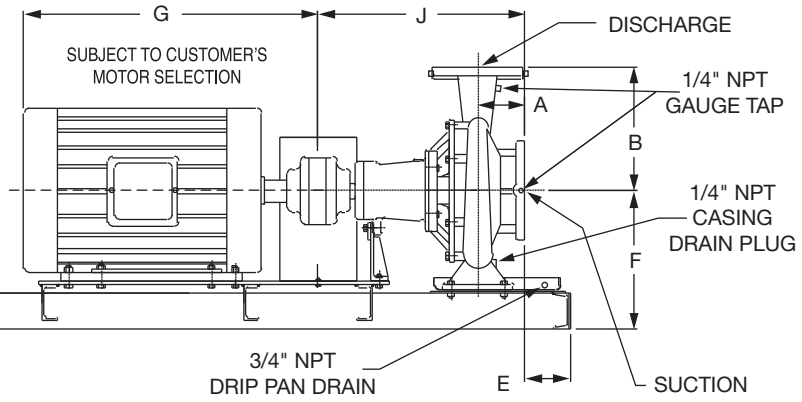

OPERATING SPECIFICATIONS

	Standard	Optional
Flange	ANSI Class 125	ANSI Class 250
Pressure	175 PSIG* (1210 KPA)	300 PSIG** (2070 KPA)
Temperature	250°F (120°C)	250°F (120°C)

Motors: All NEMA Standard (T Frame)
* In accordance with ANSI Standard B16.1 Class 125
** In accordance with ANSI Standard B16.1 Class 250 Dim.

MAXIMUM ASSEMBLY WEIGHT

Motor Frame	Weight Lbs (Kg)
56	263 (119)
143T - 145T	283 (128)
182T - 184T	333 (151)

DIMENSIONS

50 Cycle Performance Curves attached when applicable.

Model No. Flange Size (Suction x Discharge)	Motor Frame	HP 1160 (RPM)	A		B		C	D	E		F	G	J		K	N	P
			ANSI Class 125	ANSI Class 250	ANSI Class 125	ANSI Class 250			ANSI Class 125	ANSI Class 250			ANSI Class 125	ANSI Class 250			
1209C	56	0.5										11.94 (303)					
	143T	0.75					17.18 (436)	40.0 (1016)	2.53 (64)	2.28 (58)					15.68 (398)		36.0 (914)
	145T	1										13.00 (330)					
	182T	1.5	3.50	3.75	9.10	9.36					11.28	15.38 (391)	17.05	17.30		2.00	
1½ x 1¼			(89)	(95)	(231)	(238)					(287)		(433)	(439)		(51)	
(38 x 32)																	

English dimensions are in inches. Metric dimensions are in millimeters. Metric data is presented in ( ).
Do not use for construction purposes unless certified.

MATERIALS OF CONSTRUCTION

ITEM	BRONZE FITTED			ALL IRON		
	Standard Pump Construction		Optional	Standard Pump Construction		Optional
	125# Flange	250# Flange	125# or 250# Flange	125# Flange	250# Flange	125# or 250# Flange
Casing	Cast Iron ASTM A48/A48M-03 Class 30A	Ductile Iron ASTM A536-84 Grade 65-45-12	N/A	Cast Iron ASTM A48/A48M-03 Class 30A	Ductile Iron ASTM A536-84 Grade 65-45-12	N/A
Cover	Cast Iron ASTM A48/A48M-03 Class 30A	Ductile Iron ASTM A536-84 Grade 65-45-12	N/A	Cast Iron ASTM A48/A48M-03 Class 30A	Ductile Iron ASTM A536-84 Grade 65-45-12	N/A
Impeller	Bronze ASTM B584-11 C87500 0.2% Max Lead	Bronze ASTM B584-11 C87500 0.2% Max Lead	N/A	Cast Iron ASTM A48/A48M-03 Class 30A	Cast Iron ASTM A48/A48M-03 Class 30A	N/A
Wear Ring	N/A	N/A	Bronze ASTM B584-11 C89835 0.2% Max Lead	N/A	N/A	N/A
Shaft	Carbon Steel AISI 1045	Carbon Steel AISI 1045	Stainless Steel TYPE 416"T" or 410"T" ASTM A582	Carbon Steel AISI 1045	Carbon Steel AISI 1045	Stainless Steel TYPE 416"T" or 410"T" ASTM A582
Shaft Sleeve	Bronze ASTM B584-11 C92200 0.2% Max Lead	Bronze ASTM B584-11 C92200 0.2% Max Lead	Stainless Steel TYPE 303 ASTM A276	Stainless Steel TYPE 303 ASTM A276	Stainless Steel TYPE 303 ASTM A276	N/A
Mech. Seal	Ceramic/EPT	Ceramic/EPT	CF	Ceramic/EPT	Ceramic/EPT	CF
Seal Flush Line	N/A	N/A	Copper	N/A	N/A	Stainless Steel

CF - Consult Factory N/A - Not Available

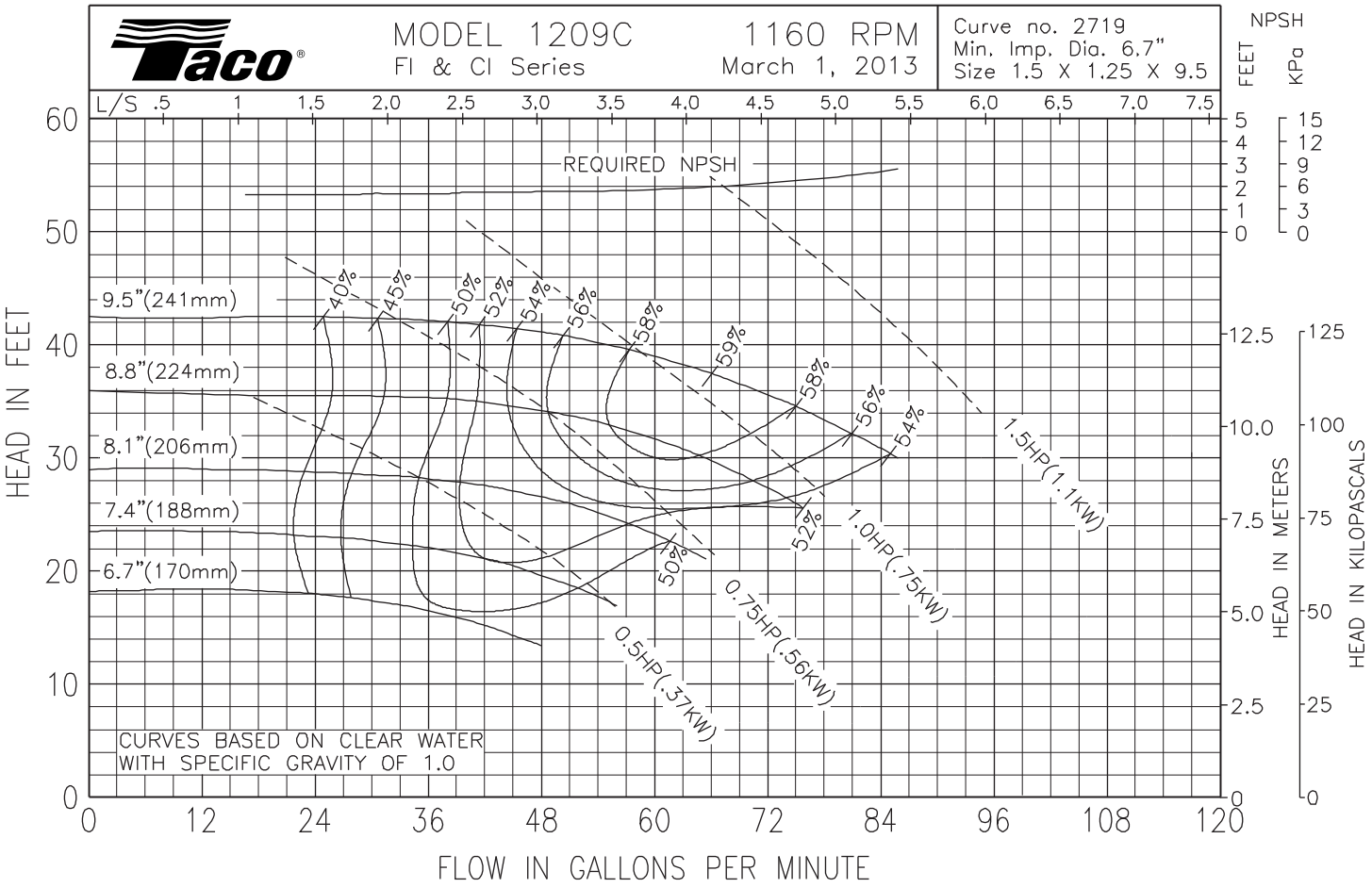

Comments: _____

TACO, INC., 1160 Cranston Street, Cranston, RI 02920 Telephone: (401) 942-8000 FAX: (401) 942-2360.
TACO (Canada), Ltd., 8450 Lawson Road, Unit #3, Milton, Ontario L9T 0J8. Telephone: 905/564-9422. FAX: 905/564-9436.
Visit our web site at: http://www.taco-hvac.com

Printed in USA
Copyright 2013
TACO, Inc.