Submittal Data Information

301-2202-G-15 TEFC

SKV Series SelfSensing Vertical Close Coupled Pumps

EFFECTIVE: APRIL 1, 2013 | SUPERSEDES: NEW | 3600 RPM MODEL1507-15-TEFC

JOB _____ ENGINEER _____

CONTRACTOR _____ REP. _____

ITEM NO.	MODEL NO.	IMPELLER DIA.	G.P.M.	HEAD/FT.	H.P.	ELEC. CHAR.

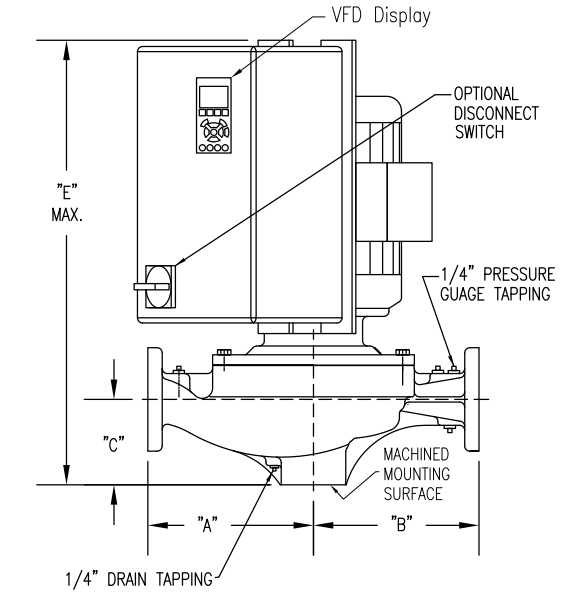

PUMP WITH OPTIONAL SUPPORT STAND

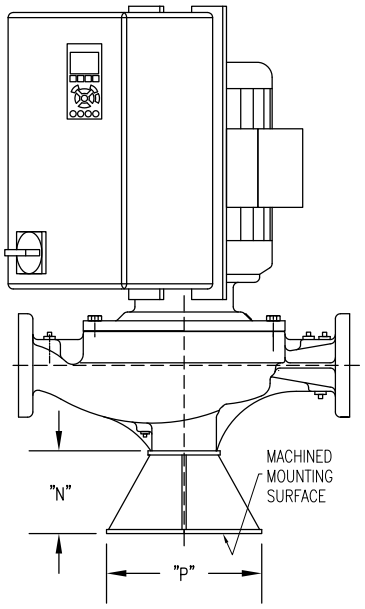

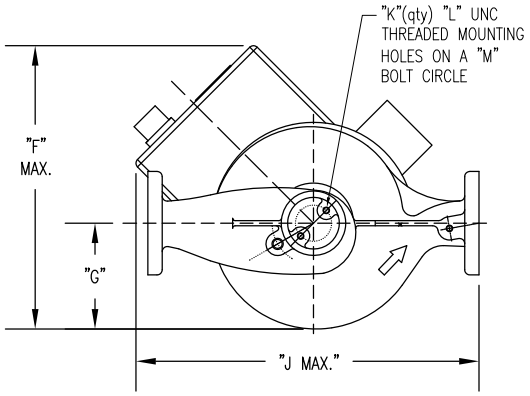

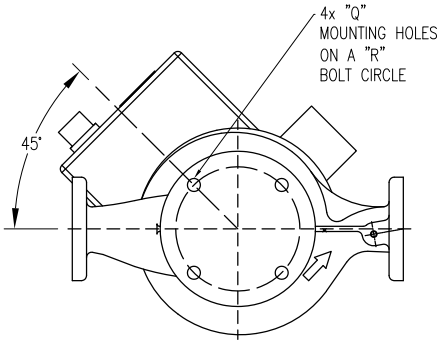

DIMENSIONS (Dimensions are for both NEMA1 and NEMA12)

*A & B Dimensions apply for all pump sizes.

Model No.	Conn.	Motor Frame	HP 3500 RPM	Flange Size (ASA)	A*	B*	C	E MAX	F MAX	G	J MAX	K	L	M	N	P	Q	R
1507-15	1.5 X 1.5 (38 X 38)	254JM	15	1.5 (38)	8.00 (203) ANSI #125 8.31 (211) ANSI #250	8.00 (203) ANSI #125 8.31 (211) ANSI #250	4.13	39.6 (1006)	31.16 (791)	5.16 (131)	34.31 (871)	2	3/8-16	1.75 (44)	6.00 (152)	7.50 (191)	0.63 (16)	6.00 (152)

English dimensions are in inches. Metric dimensions are in millimeters. Metric data is presented in ( ).
Do not use for construction purposes unless certified.

MATERIALS OF CONSTRUCTION

	BRONZE FITTED			ALL IRON		
	Standard Pump Construction		Optional	Standard Pump Construction		Optional
	125# Flange	250# Flange	125# or 250#	125# Flange	250# Flange	125# or 250#
Casing	Cast Iron ASTM A48/A48M-03 Class 30A	Ductile Iron ASTM A536-84 Grade: 65-45-12	N/A	Cast Iron ASTM A48/A48M-03 Class 30A	Ductile Iron ASTM A536-84 Grade: 65-45-12	N/A
Impeller	Bronze ASTM B584-98A C87500	Bronze ASTM B584-98A C87500	N/A	Cast Iron ASTM A48/A48M-03 Class 30A	Cast Iron ASTM A48/A48M-03 Class 30A	N/A
Wear Ring	N/A	N/A	Bronze ASTM B584-98A C92200	N/A	N/A	N/A
Shaft	Carbon Steel	Carbon Steel	Stainless Steel AISI 416 ASTM A582	Carbon Steel	Carbon Steel	Stainless Steel AISI 416 ASTM A582
Shaft Sleeve	Bronze ASTM B584-98A C92200	Bronze ASTM B584-98A C92200	Stainless Steel TYPE 303 ASTM A276	Stainless Steel TYPE 303 ASTM A276	Stainless Steel TYPE 303 ASTM A276	N/A
Mechanical Seal	Ceramic / EPT	Ceramic/EPT	Tungsten Carbide/EPT	Ceramic / EPT	Ceramic/EPT	Tungsten Carbide / EPT
Seal Flush Line	Copper	Copper	CF	Stainless Steel	Stainless Steel	CF
Support Stand	N/A	N/A	Ductile Iron ASTM A536-84 Grade: 65-45-12	N/A	N/A	Ductile Iron ASTM A536-84 Grade: 65-45-12

CF - Consult Factory NA - Not Available

OPERATING INSTRUCTIONS

	Standard		Optional
Flange	ANSI Class 125	ANSI Class 250	
Pressure	175 PSIG* (1210 KPA)	300 PSIG** (2070 KPA)	CF
Temperature	250°F (120°C)	250°F (120°C)	CF

Motors: All NEMA Standard (T Frame)
* In accordance with ANSI Standard B16.1 Class 125
** In accordance with ANSI Standard B16.1 Class 250 Dim.

MAXIMUM ASSEMBLY WEIGHT

Motor Frame	Weight without Optional Stand Lbs (Kg)	Weight with Optional Stand Lbs (Kg)
254JM - 256JM	451 (205)	461 (209)

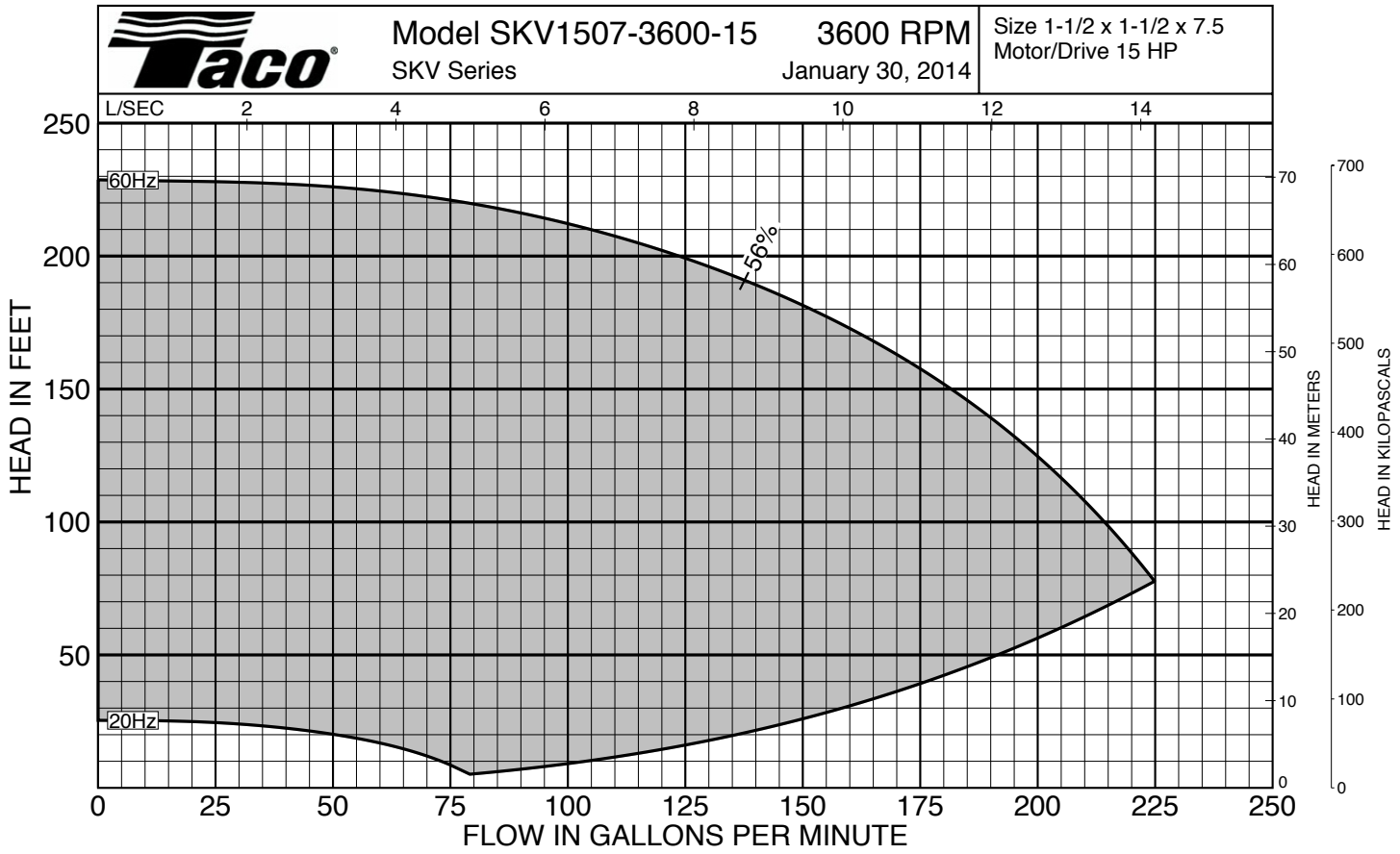

Comments: _____

SPECIFICATIONS:

MOTOR DESIGN DATA	
HP	
Volts	
Frequency	Hz
Phase	

DRIVE DATA:	
Protocols (Standard)	BACnet™, Modbus RTU, N2 Metasys, FLN Apogee, FC Protocol
Protocols (Optional)	❒ LonWorks® ❒ DeviceNet ❒ Profibus
Enclosure	❒ NEMA Type 12 / IP55 ❒ NEMA Type 4X / IP66
I/O (Standard)	6 Digital Inputs / 2 Digital Outputs 1 Analog Current Output / 2 Analog Inputs 2 Pulse Inputs 2 Form C Relays
Additional Control Options	❒ None ❒ General Purpose I/O ❒ Relay Card ❒ 24VDC Supply ❒ Analog I/O
Disconnect Switch	❒ Mechanical ❒ Fused
ENI/RFI Control	Integrated filter designed to meet EN61800-3
Harmonic Suppression	Dual DC-link chokes (Equivalent: 5% AC line reactor) Supporting IEEE 519-1992 requirements
Cooling	Fan-cooled through back channel
Ambient Temperature	-10°C to 45°C up to 1000 meters above sea level -14°F to 113°F up to 3300 feet above sea level

CONTROL CONNECTIONS:	
Analog input (follower signal)	2; selectable voltage or current, direct and inverse acting
Digital inputs (programmable)	6 (2 can be used as digital outputs)
Analog outputs (programmable)	1; 0/4 to 20 mA
Relay outputs (programmable)	2 standard Form C 240 V AC, 2 A; 1 or 3 additional optional
Auxiliary voltage	+24 V DC, maximum 200 mA
Communication port	1 RS485, 1 USB=

Do Your Best Work®

TACO INC., 1160 Cranston Street, Cranston, RI 02920 Telephone: (401) 942-8000 Fax: 942-2360
TACO (Canada), Ltd., 8450 Lawson Road, Unit #3, Milton, ON L9T 0J8. Telephone: 905/564-9422. FAX: 905/564-9436.
Visit our website at: www.taco-hvac.com

Printed in USA
Copyright 2013
TACO, Inc.