Submittal Data Information

TC Series Pumps (50 HZ NEMA)

301-1860 I

EFFECTIVE: December 1, 2011 SUPERSEDES: September 1, 2011 1450 RPM MODEL 121018

JOB _____ ENGINEER _____

CONTRACTOR _____ REP. _____

ITEM NO.	MODEL NO.	IMPELLER DIA.	G.P.M.	HEAD/FT.	H.P.	ELEC. CHAR.

WEIGHT _____ PUMP/MOTOR _____

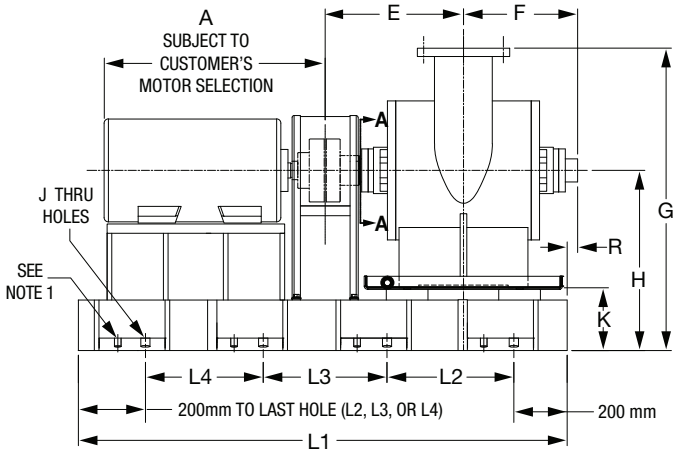

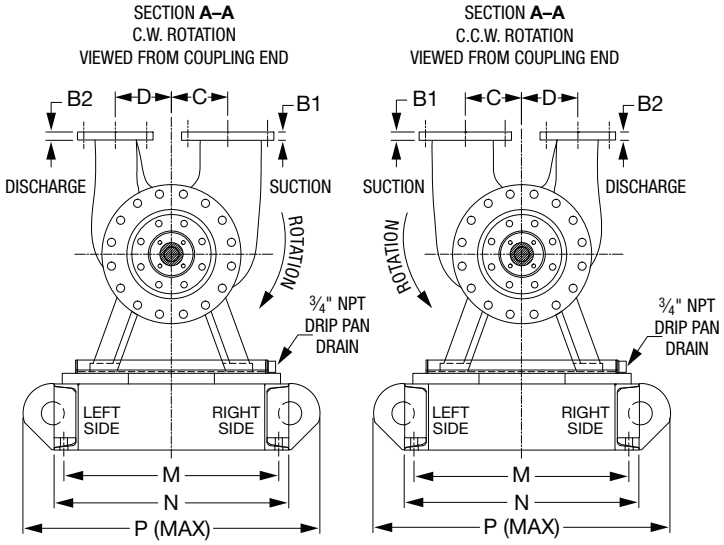

MOTOR HP & FRAME COMBINATIONS

Model No. Flange Size	HP 1450 RPM	MOTOR FRAME - ODP 380/415 VOLT *	MOTOR FRAME - ODP 3300 VOLT	MOTOR FRAME - TEFC 380/415 VOLT *	MOTOR FRAME - TEFC 3300 VOLT
121018	125	405T	N/A	444T	N/A
	150	444T		445T	
12 x 10 (305 x 254)	200	445T		445T	
	250	445T		447T	
	300	445T		449T	G5008

For all customer supplied motors above 449 NEMA frame, a certified motor drawing must be supplied by the customer at time of order entry.

Submittal dimensions for motor frames above 449 NEMA are specific to Baldor Electric Motors only.

English dimensions are in inches. Metric dimensions are in millimeters. Metric data is presented in ( ).

Dimensions are subject to change without notice. Do not use for construction purposes unless certified.

*** Standard motors are all 380/415V, 50 Hz, 3 Phase.**

NOTE 1: Smaller holes are for alignment. Dimensions not supplied.

MOTOR & FRAME DIMENSIONS

** Motor dimensions are approximate and vary by manufacturer and motor type.

Model No. Flange Size	NEMA Motor Frame	A** (Maximum Value)	J	K	L1	L2	L3	L4	M	N	P
121018	405T	44.88 (1140)	8 x 1.1 (8 x 28)	9.33 (237)	86.61 (2200)	23.62 (600)	23.62 (600)	23.62 (600)	35.43 (900)	37.64 (956)	45.28 (1150)
	444T				92.52 (2350)	25.59 (650)	25.59 (650)	25.59 (650)			
	445T										
12 x 10 (305 x 254)	447T	48.66 (1236)			101.18 (2570)	28.48 (723.3)	28.48 (723.3)	28.48 (723.3)			
	449T	53.66 (1363)			106.30 (2700)	30.19 (766.7)	30.19 (766.7)	30.19 (766.7)			
	G5008	60.39 (1534)			108.66 (2760)	30.97 (786.7)	30.97 (786.7)	30.97 (786.7)			

PUMP DIMENSIONS

Model No. Flange Size	NEMA Motor Frame	B1 Suction ANSI Class 125	B1 Suction ANSI Class 250	B2 Discharge ANSI Class 125	B2 Discharge ANSI Class 250	C	D	E	F	G	H	R
121018	405T	1.26 (32)	2.01 (51)	1.18 (30)	1.89 (48)	11.81 (300)	11.81 (300)	29.80 (757)	22.87 (581)	57.36 (1457)	35.71 (907)	2.20 (56)
	444T											
	445T											
12 x 10 (305 x 254)	447T											
	449T											
	G5008											

MATERIALS OF CONSTRUCTION

Item	Bronze Fitted		All Iron	
	Standard	Optional	Standard	Optional
Casing	Cast Iron ASTM A48 Class 30A	N/A	Cast Iron ASTM A48 Class 30A	N/A
Impeller	Bronze ASTM B584-836	Stainless Steel AISI 304	Stainless Steel AISI 304	N/A
Wear Ring	Bronze ASTM B584-836	N/A	Stainless Steel AISI 420	N/A
Shaft	Carbon Steel AISI 1045	Stainless Steel AISI 420	Carbon Steel AISI 1045	Stainless Steel AISI 420
Shaft Sleeve	Bronze ASTM B584-836	Stainless Steel AISI 420	Stainless Steel AISI 420	N/A
Mechanical Seal	Carbon/ Silicon Carbide Viton	N/A	Carbon/ Silicon Carbide Viton	N/A
Seal Flush Line	N/A	Copper	N/A	Copper

CF - Consult Factory N/A - Not Available

OPERATING SPECIFICATIONS

	Standard	Optional
Flange	ANSI Class 125	ANSI Class 250
Pressure	175 PSIG* (1210 KPA)	300 PSIG** (2070 KPA)
Temperature	250°F (120°C)	250°F (120°C)

* In accordance with ANSI Standard B16.1 Class 125
** In accordance with ANSI Standard B16.1 Class 250

MAXIMUM ASSEMBLY WEIGHT (INCLUDING MOTOR)

Motor Frame	Weight Lbs (Kg)
404T - 405T	5040 (2288)
444T - 445T	6030 (2738)
447T - 449T	6950 (3155)
G5008	9290 (4218)

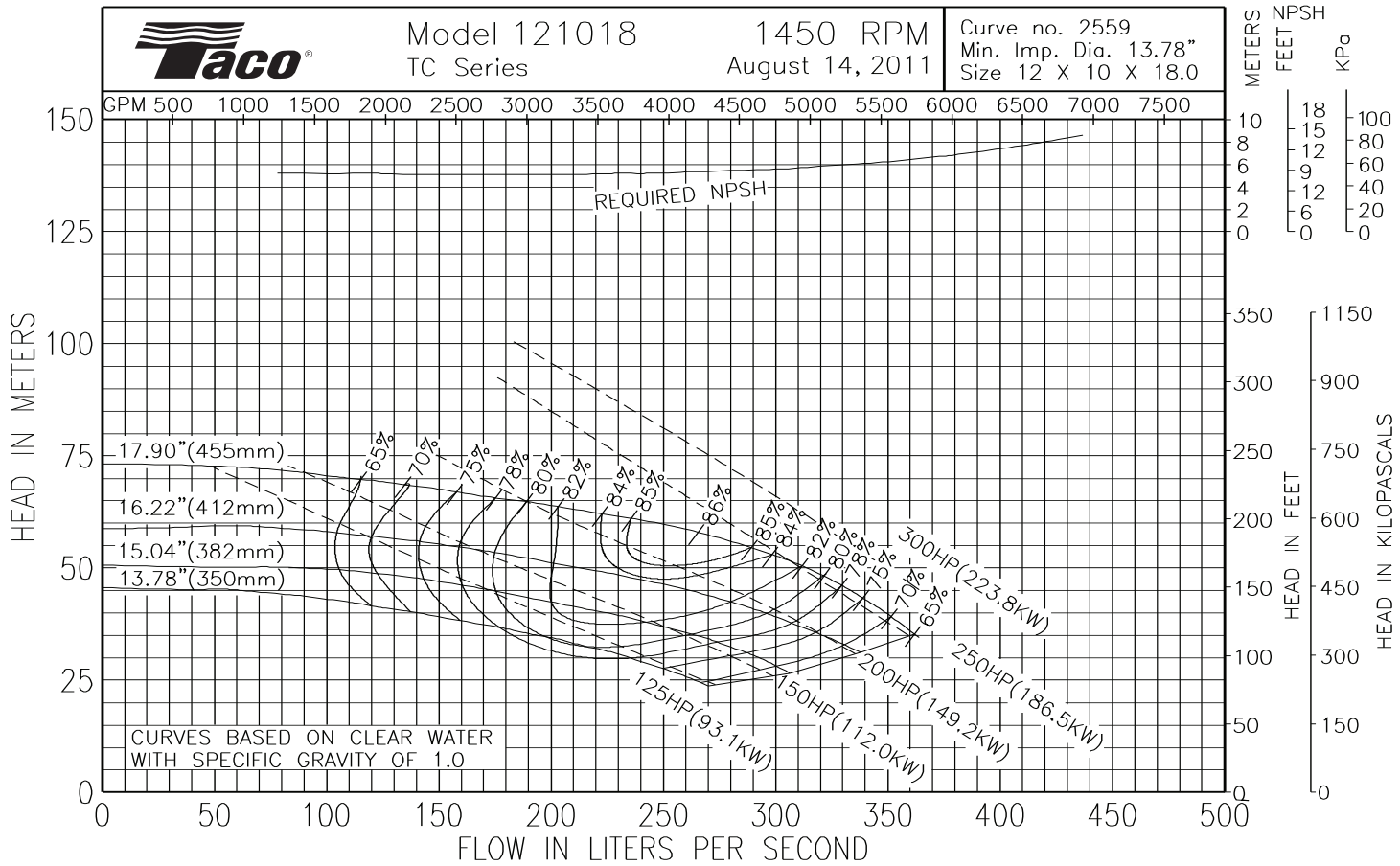

Comments: _____

Do it Once. Do it Right.®

TACO, INC., 1160 Cranston Street, Cranston, RI 02920 Telephone: (401) 942-8000 FAX: (401) 942-2360.
TACO (Canada), Ltd., 8450 Lawson Road, Unit #3, Milton, Ontario L9T 0J8. Telephone: 905/564-9422. FAX: 905/564-9436.
Visit our web site at: http://www.taco-hvac.com

Printed in USA
Copyright 2011
TACO, Inc.