Submittal Data Information

TC Series Pumps (60 Hz NEMA)

301-1855

EFFECTIVE: December 1, 2011 SUPERSEDES: October 1, 2010 1760 RPM MODEL 100821

JOB _____ ENGINEER _____

CONTRACTOR _____ REP. _____

ITEM NO.	MODEL NO.	IMPELLER DIA.	G.P.M.	HEAD/FT.	H.P.	ELEC. CHAR.

WEIGHT _____ PUMP/MOTOR _____

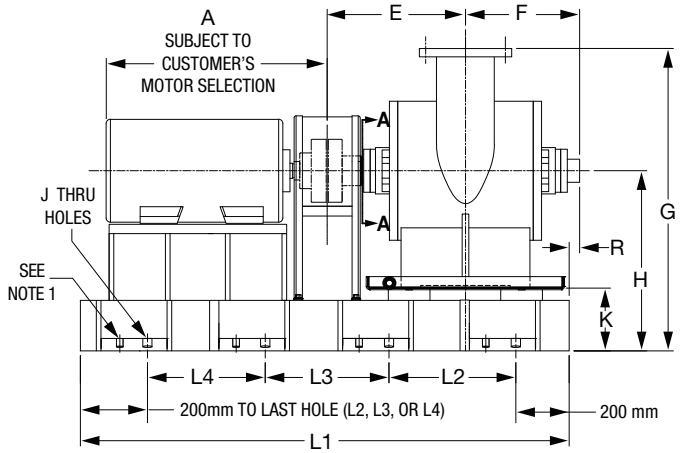

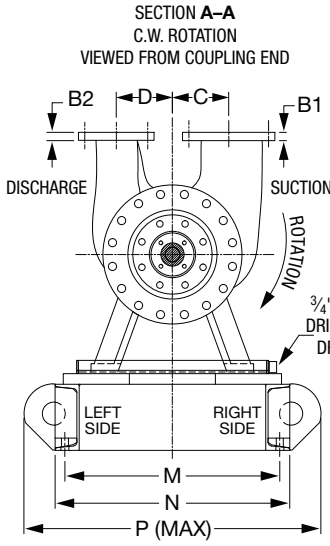

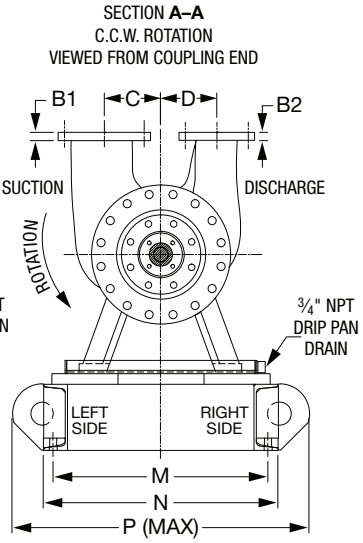

MOTOR HP & FRAME COMBINATIONS

Model No. Flange Size	HP 1760 RPM	MOTOR FRAME - ODP 460 VOLT *	MOTOR FRAME - ODP 2300/4160 VOLT	MOTOR FRAME - TEFC 460 VOLT *	MOTOR FRAME - TEFC 2300/4160 VOLT
100821 10 x 8 (254 x 203)	300	449T	449T	449T	G5008
	350	449T	E5008	449T	G5008
	400	449T	E5008	449T	G5008
	450	449T	E5008	G5010	G5010
	500	E5008	E5010	G5010	G5010
	600	E5010	E5010	G5012	G5012
	700	E5010	E5010	G5012	G5012
	800	E5012	E5012	G5012	G5012

For all customer supplied motors above 449 NEMA frame, a certified motor drawing must be supplied by the customer at time of order entry.

Submittal dimensions for motor frames above 449 NEMA are specific to Baldor Electric Motors only.

English dimensions are in inches. Metric dimensions are in millimeters. Metric data is presented in ( ).

Dimensions are subject to change without notice. Do not use for construction purposes unless certified.

*** Standard voltage is 230/460 for motors up to 100HP.**

NOTE 1: Additional set of smaller holes are for alignment. Dimensions not supplied.

MOTOR & FRAME DIMENSIONS

** Motor dimensions are approximate and vary by manufacturer and motor type.

Model No. Flange Size	NEMA Motor Frame	A** (Maximum Value)	J	K	L1	L2	L3	L4	M	N	P
100821 10 x 8 (254 x 203)	449T	53.66 (1363)	8 x 1.1 (8 x 28)	9.33 (237)	102.36 (2600)	28.87 (733.3)	28.87 (733.3)	28.87 (733.3)	37.40 (950)	39.76 (1010)	46.85 (1190)
	E5008	60.39 (1534)			95.28 (2420)	26.51 (673.3)	26.51 (673.3)	26.51 (673.3)			
	G5008				104.33 (2650)	29.53 (750)	29.53 (750)	29.53 (750)			
	E5010	67.40 (1712)			102.36 (2600)	28.87 (733.3)	28.87 (733.3)	28.87 (733.3)			
	G5010				111.42 (2830)	31.89 (810)	31.89 (810)	31.89 (810)			
	E5012	75.39 (1915)			111.42 (2830)	31.89 (810)	31.89 (810)	31.89 (810)			
	G5012				119.69 (3040)	34.65 (880)	34.65 (880)	34.65 (880)			

PUMP DIMENSIONS

Model No. Flange Size	NEMA Motor Frame	B1 Suction ANSI Class 125	B1 Suction ANSI Class 250	B2 Discharge ANSI Class 125	B2 Discharge ANSI Class 250	C	D	E	F	G	H	R
100821 10 x 8 (254 x 203)	449T	1.18 (30)	1.89 (48)	1.10 (28)	1.61 (41)	11.81 (300)	11.81 (300)	27.44 (697)	20.94 (532)	52.64 (1337)	32.95 (837)	2.64 (67)
	E5008											
	E5010											
	E5012											
	G5008											
	G5010											
	G5012											

MATERIALS OF CONSTRUCTION

Item	Bronze Fitted		All Iron	
	Standard	Optional	Standard	Optional
Casing	Cast Iron ASTM A48 Class 30A	N/A	Cast Iron ASTM A48 Class 30A	N/A
Impeller	Bronze ASTM B584-836	Stainless Steel AISI 304	Stainless Steel AISI 304	N/A
Wear Ring	Bronze ASTM B584-836	N/A	Stainless Steel AISI 420	N/A
Shaft	Carbon Steel AISI 1045	Stainless Steel AISI 420	Carbon Steel AISI 1045	Stainless Steel AISI 420
Shaft Sleeve	Bronze ASTM B584-836	Stainless Steel AISI 420	Stainless Steel AISI 420	N/A
Mechanical Seal	Carbon/ Silicon Carbide Viton	N/A	Carbon/ Silicon Carbide Viton	N/A
Seal Flush Line	N/A	Copper	N/A	Copper

CF - Consult Factory N/A - Not Available

OPERATING SPECIFICATIONS

	Standard	Optional
Flange	ANSI Class 125	ANSI Class 250
Pressure	175 PSIG* (1210 KPA)	300 PSIG** (2070 KPA)
Temperature	250°F (120°C)	250°F (120°C)

* In accordance with ANSI Standard B16.1 Class 125
** In accordance with ANSI Standard B16.1 Class 250

MAXIMUM ASSEMBLY WEIGHT (INCLUDING MOTOR)

Motor Frame	Weight Lbs (Kg)
447T - 449T	6631 (3010)
E5008	7351 (3337)
G5008	8851 (4018)
E5010	8351 (3791)
G5010	9701 (4404)
E5012	10400 (4717)
G5012	10651 (4836)

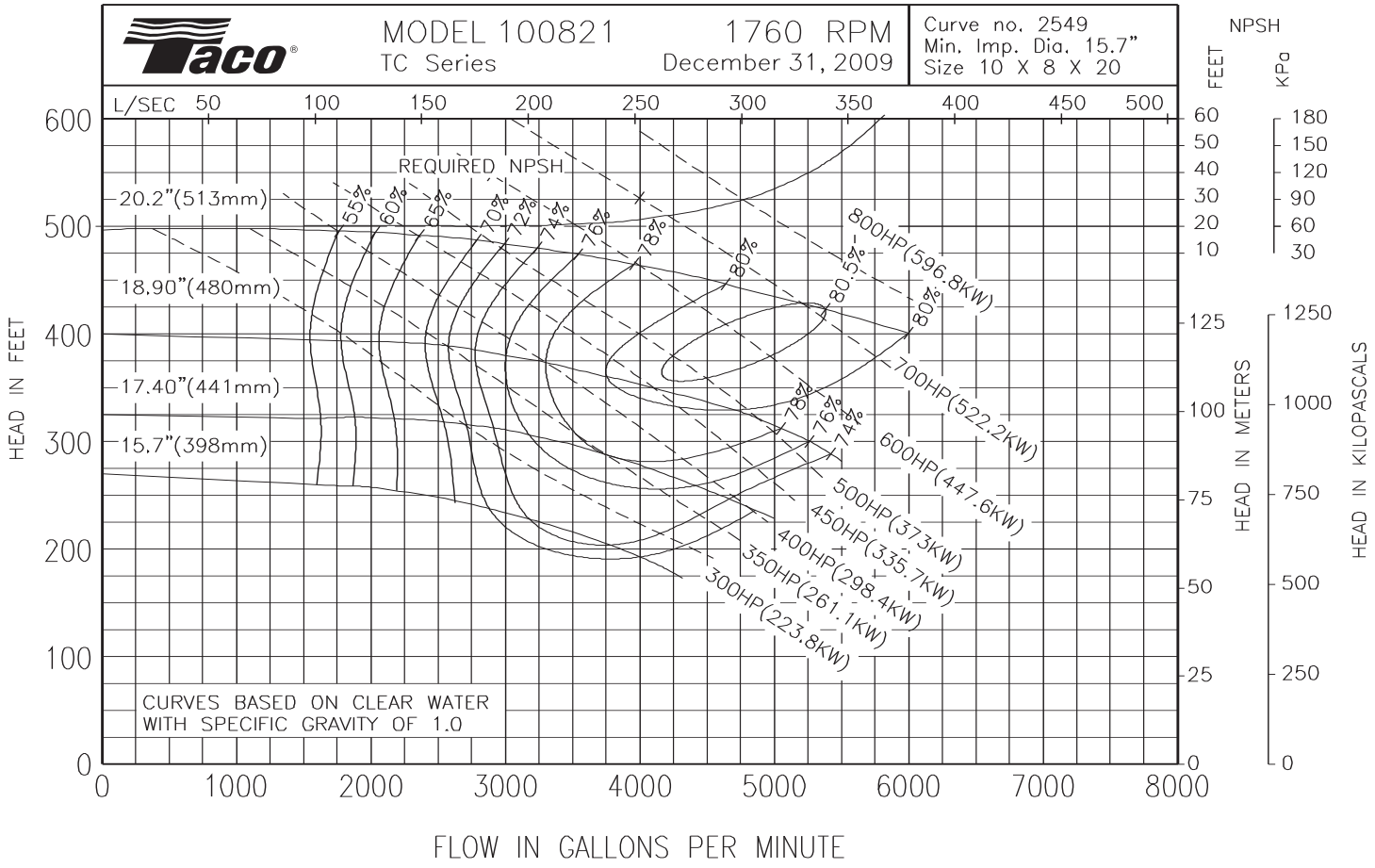

Comments: _____

Do it Once. Do it Right.®

TACO, INC., 1160 Cranston Street, Cranston, RI 02920 Telephone: (401) 942-8000 FAX: (401) 942-2360.
TACO (Canada), Ltd., 8450 Lawson Road, Unit #3, Milton, Ontario L9T 0J8. Telephone: 905/564-9422. FAX: 905/564-9436.
Visit our web site at: http://www.taco-hvac.com

Printed in USA
Copyright 2011
TACO, Inc.