Submittal Data Information

VT Series Pumps

301-1800

EFFECTIVE: DECEMBER 31, 2012 SUPERSEDES: FEBRUARY 1, 2012

JOB _____ ENGINEER _____ CONTRACTOR _____ REP. _____

ITEM NO.	MODEL NO.	IMPELLER DIA.	G.P.M.	HEAD/FT.	SUMP DEPTH.	TPL

WEIGHT _____ PUMP/MOTOR _____

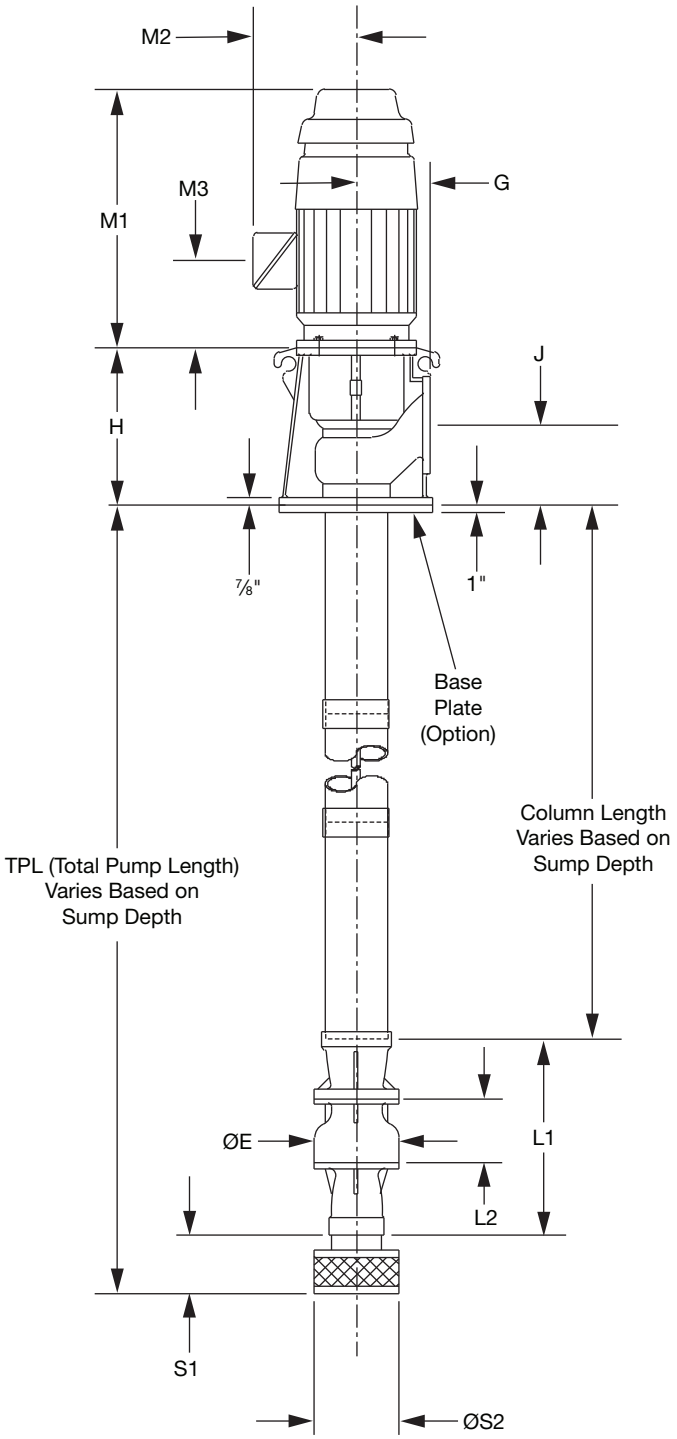

BOWL MODEL # _____

IMP. DIA. _____
IMP. TYPE _____
SPECIAL _____

BASKET STRAINER _____

COLUMN ASSY _____

DISCHARGE HEAD _____

DISCHARGE FLANGE _____

BASE PLATE _____

SEAL TYPE _____

OTHER _____

MOTOR

MAKE _____
ENCLOSURE _____
N.R.R.
H.P. _____ S.F. _____
R.P.M. _____
PHASE _____ CYCLE _____
VOLTAGE _____
V.H.S.
OTHER MOTOR INFO _____

All dimensions are in inches.

BOWL ASSEMBLY

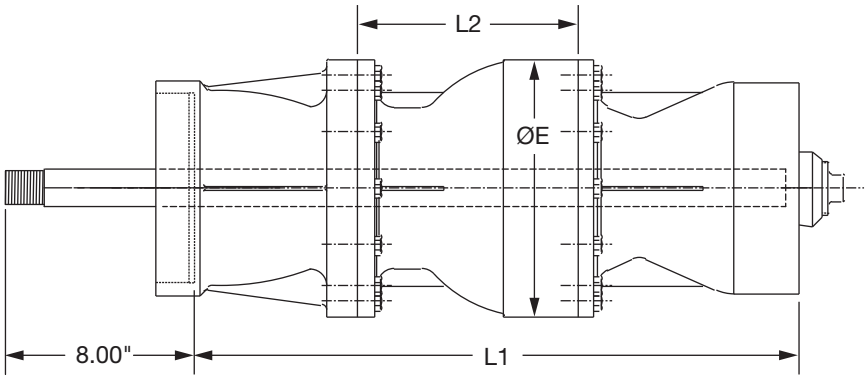

BOWL ASSEMBLY DIMENSIONS:

All dimensions are in inches. All weights are in pounds.

MODEL AND SIZE	SINGLE STAGE ASSY. LENGTH	BOWL LENGTH	STANDARD BOWL O.D.	BOWL SHAFT DIAMETER	COLUMN PIPE SIZES	SUCTION PIPE SIZES	1st STAGE BOWL ASSY. WGT.	ADDITIONAL STAGE WGT.
	L1	L2	ØE					
VT06LL/VT06LH	12.688	5.125	6.281	1.000	4	4	50	17
VT06HL/VT06HH	12.875	4.750	5.563	1.000	4	4	40	12
VT07LL/VT07LH	16.344	5.500	7.094	1.188	4, 6	6	70	25
VT07ML/VT07MH	17.219	6.375	7.094	1.188	4, 6	6	73	28
VT07HL/VT07HH	17.938	7.094	7.094	1.188	4, 6	6	74	29
VT08HL	23.500	7.875	8.188	1.188	6	6	106	39
VT08HH	23.500	7.875	8.188	1.188	6	6	106	39
VT09CC	23.000	7.750	9.500	1.500	6	6	150	60
VT09EC	23.000	7.750	9.500	1.500	6	6	150	60
VT09ML	23.500	8.500	9.500	1.500	6	6	159	64
	20.125				8		143	
VT09MH	23.500	8.500	9.500	1.500	6	6	159	64
	20.125				8		143	
VT09HL	24.562	9.313	9.500	1.500	6	6	156.4	68
	20.500				8		141.8	
VT09HH	24.532	9.313	9.500	1.500	6	6	156.4	68
	20.500				8		141.8	
VT09ZC	23.000	8.500	9.500	1.500	8	8	145	54
VT11LL/VT11LH	25.875	8.750	11.000	1.688	6	8	246	86
	25.813				8		245	
VT11ML/VT11MH	27.156	10.031	11.000	1.688	6	8	252	94
	27.094				8		251	
VT12CC	26.500	9.000	11.625	1.688	6, 8	8	235	105
VT12DC	26.500	9.000	11.625	1.688	6, 8	8	235	105
VT12IC	27.500	10.000	11.750	1.688	6, 8	8	250	107
VT12KC	27.500	10.000	11.750	1.688	6, 8	8	250	107
VT12LC	28.813	11.000	11.750	1.688	8	8	279	124
	28.781				10		285	
VT12MC	29.125	9.312	11.687	1.688	8, 10	10	274	104
VT12HH	28.250	11.250	11.750	1.688	8	10	251	99
					10		253	
VT14LH	32.625	12.125	14.000	2.188	10	10	437	171
	32.531				12		436	
VT14ML	33.750	13.500	14.000	2.188	10, 12	10	377	159
VT14MH	33.750	13.500	14.000	2.188	10, 12	10	377	159
VT14HL/VT14HH	33.875	13.625	14.000	2.188	10, 12	10	377	159
VT16MH	31.625	15.000	15.500	1.938	12	BELL*	569	237
VT16HH	32.250	15.625	16.050	1.938	12	BELL*	583	255
VT18HL/VT18HH	28.625	18.625	18.531	1.938	12, 14, 16	BELL*	586	395

* Consult Factory.

DISCHARGE HEAD

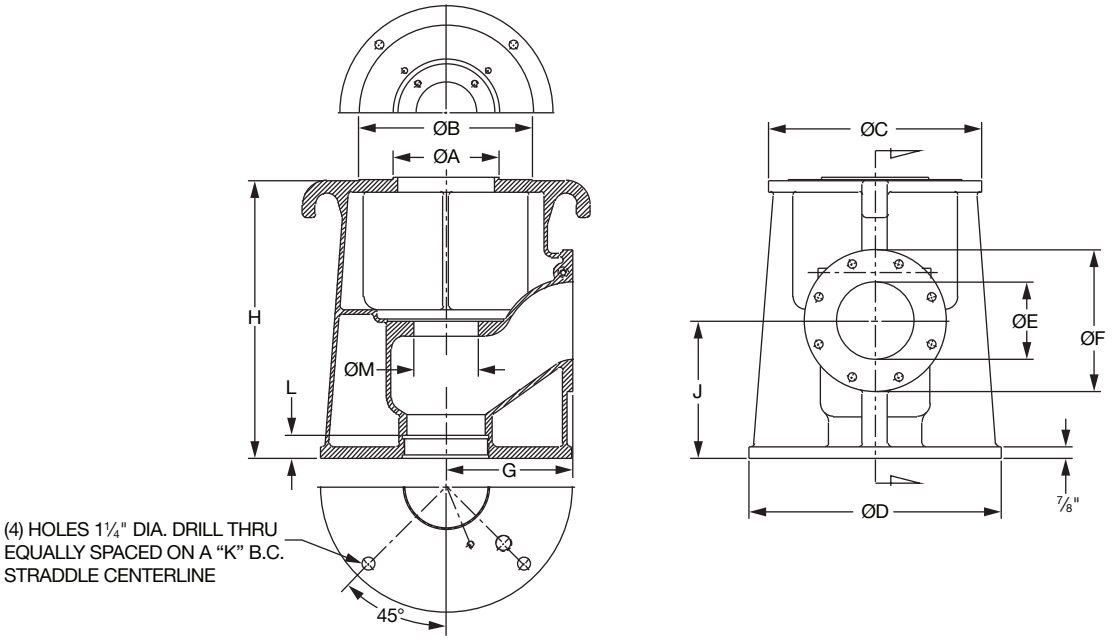

DISCHARGE HEAD DIMENSIONS: All dimensions are in inches. All weights are in pounds.

MODEL/SIZE	ØA	ØB	ØC	ØD	ØE	ØF	G	H	J	K	L	ØM	WGT.
VT04DH	8¼	N/A	12	19⅜	4	9	9⅞	21½	10⅝	17	1¾	4.687	186
VT06DH	8¼	13½	16½	19½	6	11	9⅞	21½	10⅝	17	1¾	4.687	262
VT08DH	8¼	13½	16½	21¼	8	13½	9⅞	21½	10⅝	18¾	2	4.687	279
VT10DH	N/A	13½	20	21¼	10	16	9⅞	21½	10⅝	18¾	2½	4.687	311
VT12DH	N/A	13½	20	24⅞	12	19	14	23	12	22¾	2½	5.5625	630

BASE PLATE

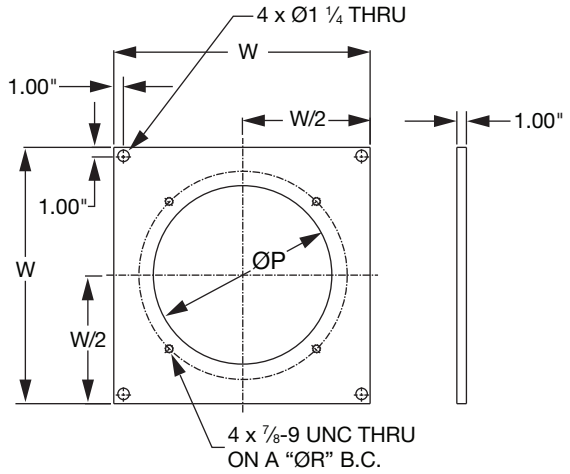

BASE PLATE DIMENSIONS: All dimensions are in inches. All weights are in pounds.

MODEL/ SIZE	DISCHARGE HEAD SIZE	W	W/2	ØP	ØR (BOLT CIRCLE)	WGT.
VT04BP	4"	24"	12"	14"	17.000"	104
VT06BP	6"	24"	12"	14"	17.000"	104
VT08BP	8"	24"	12"	16"	18.750"	104
VT10BP	10"	24"	12"	16"	18.750"	104
VT12BP	12"	28"	14"	19.5"	22.750"	165

BASKET TYPE SUCTION STRAINER

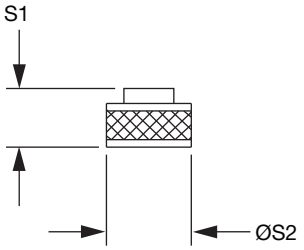

SUCTION STRAINER DIMENSIONS:

MODEL/ SIZE	SUCTION SIZE	S1	ØS2	WEIGHT
VT04BS	4	6	6½	8
VT06BS	6	6	8½	9
VT08BS	8	7¾	10¾	13
VT10BS	10	9⅞	13	17
VT12BS	12	11⅞	18⅝	25

All dimensions are in inches. All weights are in pounds.

COLUMN ASSEMBLIES

COLUMN ASSEMBLIES DIMENSIONS:

ITEM NUMBER	DESCRIPTION	SHAFT LENGTH (FEET)	SHAFT DIAMETER (INCHES)	MAX HORSEPOWER	WEIGHT (LBS)
VT04100CA-T05	4 x 1 Standard Wall	5	1	40	75
VT04100CA-T10		10			150
VT06100CA-T05	6 x 1 Standard Wall	5			120
VT06100CA-T10		10			230
VT06118CA-T05	6 x $1^{3}/_{16}$ Standard Wall	5	$1^{3}/_{16}$	75	125
VT06118CA-T10		10			240
VT08118CA-T05	8 x $1^{3}/_{16}$ Standard Wall	5			155
VT08118CA-T10		10			310
VT10118CA-T05	10 x $1^{3}/_{16}$ Standard Wall	5			200
VT10118CA-T10		10			400
VT12118CA-T05	12 x $1^{3}/_{16}$ Standard Wall	5			270
VT12118CA-T10		10			540
VT08150CA-T05	8 x $1^{1}/_{2}$ Standard Wall	5	$1^{1}/_{2}$	150	170
VT08150CA-T10		10			330
VT10150CA-T05	10 x $1^{1}/_{2}$ Standard Wall	5			215
VT10150CA-T10		10			420
VT12150CA-T05	12 x $1^{1}/_{2}$ Standard Wall	5			285
VT12150CA-T10		10			560
VT10168CA-T05	10 x $1^{11}/_{16}$ Standard Wall	5	$1^{11}/_{16}$	300	225
VT10168CA-T10		10			440
VT12168CA-T05	12 x $1^{11}/_{16}$ Standard Wall	5			295
VT12168CA-T10		10			580

Column assemblies cut to length.

MOTOR

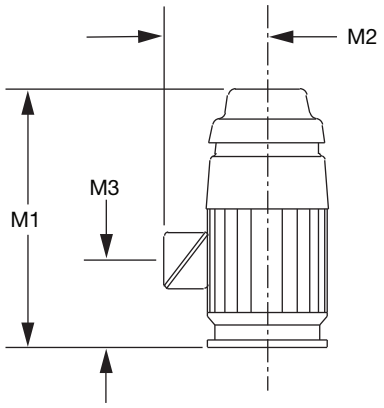

NEMA MG1-31 Design
High Efficiency Vertical Hollowshaft WP-1 Enclosure

GE VHS MOTOR DIMENSIONS:

HP (1760RPM)	M1	M2	M3	WEIGHT
5	24.29	9.30	8.14	220
7.5	24.29	9.30	8.14	220
10	24.29	9.30	8.14	220
15	30.60	10.97	9.41	340
20	27.85	10.97	9.41	370
25	29.25	14.60	10.19	507
30	29.25	14.60	10.19	507
40	32.53	14.68	13.40	760
50	32.53	14.68	13.40	760
60	35.70	15.78	16.12	1102
75	35.70	15.78	16.12	1102
100	41.96	20.90	15.68	1590

All dimensions are in inches. All weights are in pounds.

PUMP MATERIALS OF CONSTRUCTION:

ITEM	STANDARD PUMP CONSTRUCTION	OPTIONAL
Bowl Assembly	Cast Iron, ASTM A48, Class 30	CF
Impeller	201SS, ASTM A296	CF
Pump Shaft	416SS, ASTM A582	CF
Discharge Head	Ductile Iron, ASTM A536, Class 65	CF
Packing/ Mechanical Seal	John Crane 1345 Packing	Tungsten/Viton Balanced Seal
Column Pipe	Steel Pipe, ASTM A53 Grade B	CF
Bearing Retainers	Stainless Steel, AISI 201	CF
Lineshaft	416SS, ASTM A582	CF

ACCESSORIES MATERIALS OF CONSTRUCTION:

ITEM	STANDARD CONSTRUCTION	OPTIONAL
Suction Strainer	304SS, ASTM A240	CF
Baseplate	A-36 HRS Steel	CF
Shaft Guard	304SS, ASTM A240	CF

OPERATING SPECIFICATIONS:

Flange	ANSI 150 lb.
Working Pressure	200 PSIG (1379 kpa)
Temperature	140°F (60°C)

Do it Once. Do it Right.®

TACO, INC., 1160 Cranston Street, Cranston, RI 02920 Telephone: (401) 942-8000 FAX: (401) 942-2360.
TACO (Canada), Ltd., 8450 Lawson Road, Unit #3, Milton, ON L9T 0J8. Telephone: 905/564-9422. FAX: 905/564-9436.

Visit our web site at: http://www.taco-hvac.com

Printed in USA
Copyright 2012
TACO, Inc.