Submittal Data Information
FI Series Pumps

301-1400

EFFECTIVE: MARCH 1, 2010 SUPERSEDES: OCTOBER 1, 2009 1760 RPM MODEL 1206

JOB _____ ENGINEER _____

CONTRACTOR _____ REP. _____

ITEM NO.	MODEL NO.	IMPELLER DIA.	G.P.M.	HEAD/FT.	H.P.	ELEC. CHAR.

WEIGHT _____ PUMP/MOTOR _____

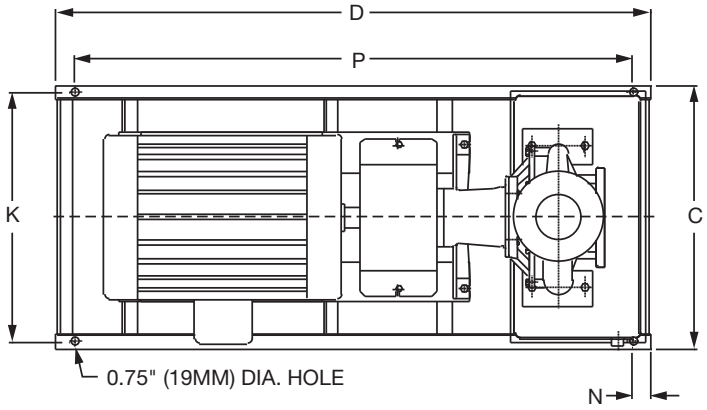

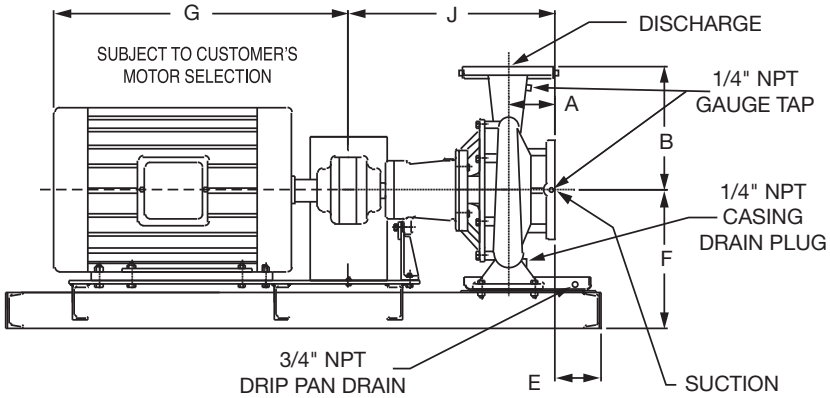

DIMENSIONS

50 Cycle Performance Curves attached when applicable.

Model No. Flange Size (Suction x Discharge)	Motor Frame	HP 1760 RPM	A		B		C	D	E		F	G	J		K	N	P
			ANSI Class 125	ANSI Class 250	ANSI Class 125	ANSI Class 250			ANSI Class 125	ANSI Class 250			ANSI Class 125	ANSI Class 250			
1206 2 x 1¼ (51 x 32)	56	0.5	3.75 (95)	4.00 (102)	6.25 (159)	6.50 (165)	14.17 (360)	30.0 (762)	0.75 (19)	0.49 (12)	9.51 (242)	11.94 (303)	16.98 (431)	17.23 (438)	12.67 (322)	2.00 (51)	26.0 (660)
		0.75					14.17 (360)	30.0 (762)	0.75 (19)	0.49 (12)		11.94 (303)			12.67 (322)		26.0 (660)
	143T	1					14.17 (360)	30.0 (762)	0.75 (19)	0.49 (12)		11.94 (303)			12.67 (322)		26.0 (660)

English dimensions are in inches. Metric dimensions are in millimeters. Metric data is presented in ( ).
Do not use for construction purposes unless certified.

MATERIALS OF CONSTRUCTION

Item	BRONZE FITTED		ALL IRON	
	Std. Pump Constr.	Optional	Standard	Optional
Casing	Cast Iron ASTM A48 Class 30A	N/A	Cast Iron ASTM A48 Class 30A	N/A
Impeller	Bronze ASTM B584-836	N/A	Cast Iron ASTM A48 Class 30A	N/A
Wear Ring	N/A	Bronze ASTM B584-932 SAE660	N/A	N/A
Shaft	Carbon Steel AISI 1045	St. Steel AISI 416 ASTM A582	Carbon Steel AISI 1045	St. Steel AISI 416 ASTM A582
Shaft Sleeve	Bronze ASTM B584-932 SAE660	St. Steel AISI 303 ASTM A276	St. Steel AISI 303 ASTM A276	N/A
Mech. Seal	Ceramic/ EPT	CF	Ceramic/ EPT	CF
Seal Flush Line	N/A	Copper	N/A	Stainless Steel

CF - Consult Factory N/A - Not Available

OPERATING SPECIFICATIONS

	Standard	Optional
Flange	ANSI Class 125	ANSI Class 250
Pressure	175 PSIG* (1210 KPA)	300 PSIG** (2070 KPA)
Temperature	250°F (120°C)	250°F (120°C)

Motors: All NEMA Standard (T Frame)
* In accordance with ANSI Standard B16.1 Class 125
** In accordance with ANSI Standard B16.1 Class 250 Dim.

MAXIMUM ASSEMBLY WEIGHT

Motor Frame	Weight Lbs (Kg)
56	196 (89)
143T - 145T	216 (98)

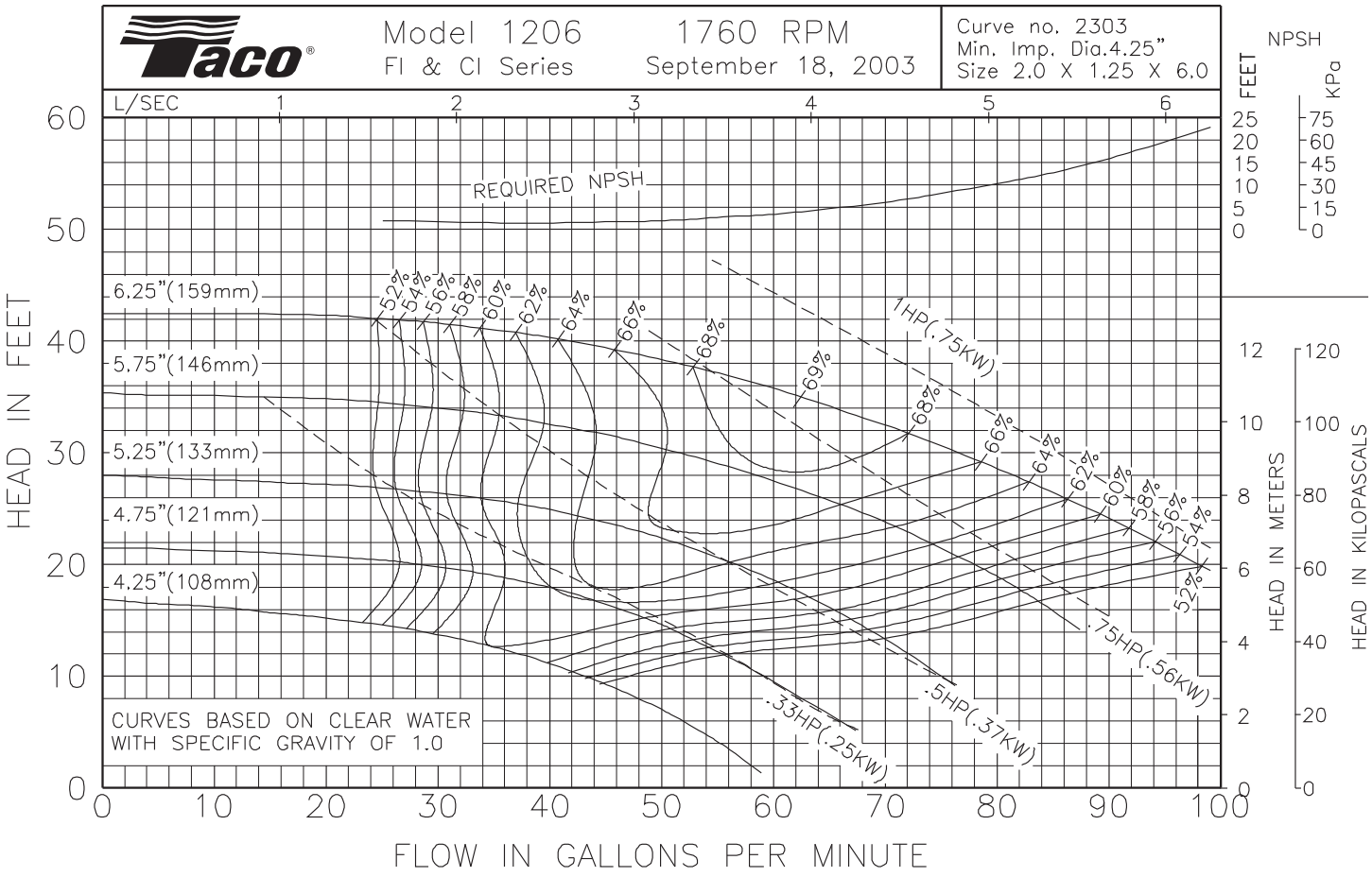

Comments: _____

Do it Once. Do it Right.®

TACO, INC., 1160 Cranston Street, Cranston, RI 02920 Telephone: (401) 942-8000 FAX: (401) 942-2360.
TACO (Canada), Ltd., 8450 Lawson Road, Unit #3, Milton, Ontario L9T 0J8. Telephone: 905/564-9422. FAX: 905/564-9436.
Visit our web site at: http://www.taco-hvac.com

Printed in USA
Copyright 2010
TACO, Inc.