Submittal Data Information

KV Series Vertical Close Coupled Pumps

301-1053

EFFECTIVE: JANUARY 8, 2010 SUPERSEDES: NOVEMBER 1, 2009 1160 RPM MODEL 3013

JOB _____ ENGINEER _____

CONTRACTOR _____ REP. _____

ITEM NO.	MODEL NO.	IMPELLER DIA.	G.P.M.	HEAD/FT.	H.P.	ELEC. CHAR.

WEIGHT _____ PUMP/MOTOR _____

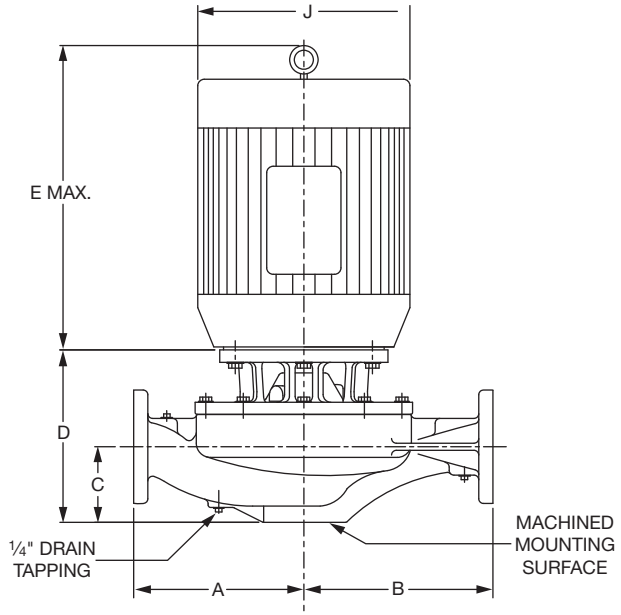

PUMP WITH OPTIONAL SUPPORT STAND

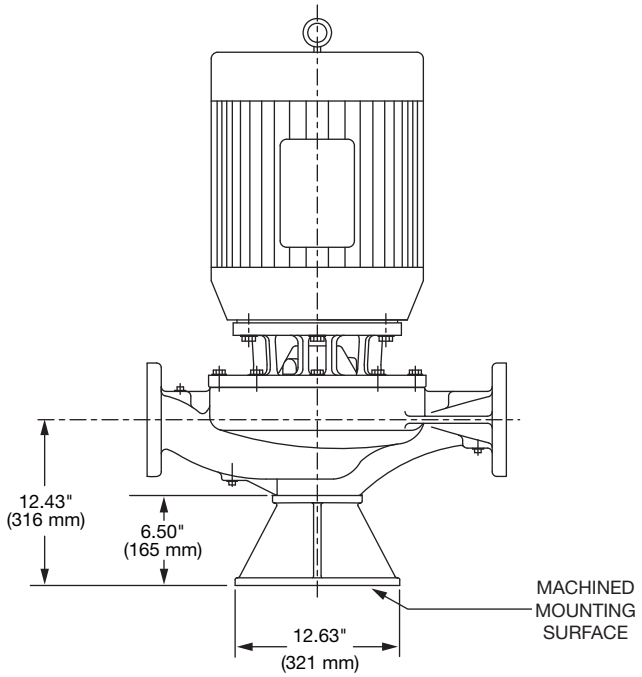

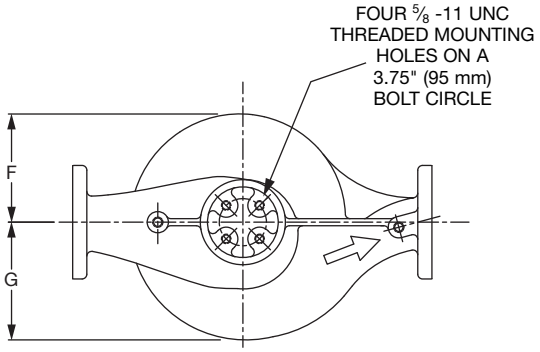

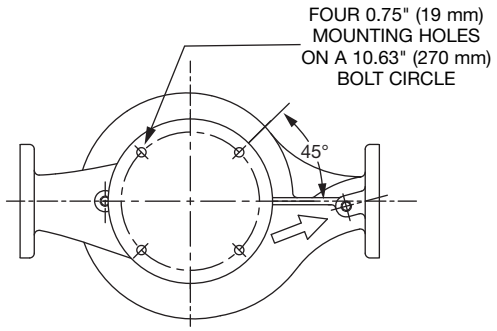

DIMENSIONS *A & B Dimensions apply for all pump sizes.

Model No.	Conn.	Motor Frame	HP 1160 RPM	Flange Size ASA	A*	B*	C	D	E MAX	F	G	H	J DIA
3013	3 x 3 (76 x 76)	184JM	2	3 (76)	13.63 (346) if ANSI Class 125 14.00 (356) if ANSI Class 250	14.13 (359) if ANSI Class 125 14.50 (368) if ANSI Class 250	5.93 (151)	10.55 (268)	15.58 (396)	8.31 (211)	8.77 (223)	0.25 (6)	7.88 (200)
		213JM	3					10.73 (273)	16.68 (424)				9.56 (243)
		215JM	5					10.73 (273)	18.18 (462)				9.56 (243)
		254JM	7.5					11.36 (289)	17.83 (453)				12.94 (329)

English dimensions are in inches. Metric dimensions are in millimeters. Metric data is presented in ( ).
Do not use for construction purposes unless certified.

MATERIALS OF CONSTRUCTION

Item	BRONZE FITTED		ALL IRON	
	Standard Pump Construction	Optional	Standard	Optional
Casing	Cast Iron ASTM A48 Class 30A	N/A	Cast Iron ASTM A48 Class 30A	N/A
Impeller	Bronze ASTM B584-836	CF	Cast Iron ASTM A48 Class 30A	CF
Wear Ring	None	Bronze ASTM B584-932 SAE660	None	N/A
Shaft	Carbon Steel	St. Steel AISI 416 ASTM A582	Carbon Steel	St. Steel AISI 416 ASTM A582
Shaft Sleeve	Bronze ASTM B584-932 SAE660	St. Steel AISI 303 ASTM A276	St. Steel AISI 303 ASTM A276	CF
Mechanical Seal	Ceramic / EPT	Tungsten Carbide / EPT	Ceramic / EPT	Tungsten Carbide / EPT
Seal Flush Line	Copper	CF	Stainless Steel	CF
Support Stand	N/A	Ductile Iron ASTM A536-84 Grade: 65-45-12	N/A	Ductile Iron ASTM A536-84 Grade: 65-45-12

CF - Consult Factory N/A - Not Available

OPERATING SPECIFICATIONS

	Standard		Optional
Flange	ANSI Class 125	ANSI Class 250	
Pressure	175 PSIG* (1210 KPA)	300 PSIG** (2070 KPA)	CF
Temperature	250°F (120°C)	250°F (120°C)	CF

Motors: All NEMA Standard (T Frame)
* In accordance with ANSI Standard B16.1 Class 125
** In accordance with ANSI Standard B16.1 Class 250 Dim.

MAXIMUM ASSEMBLY WEIGHT

Motor Frame	Weight without Optional Stand Lbs (Kg)	Weight with Optional Stand Lbs (Kg)
182JM - 184JM	293 (133)	340 (154)
213JM - 215JM	345 (156)	392 (178)
254JM - 256JM	435 (197)	482 (219)

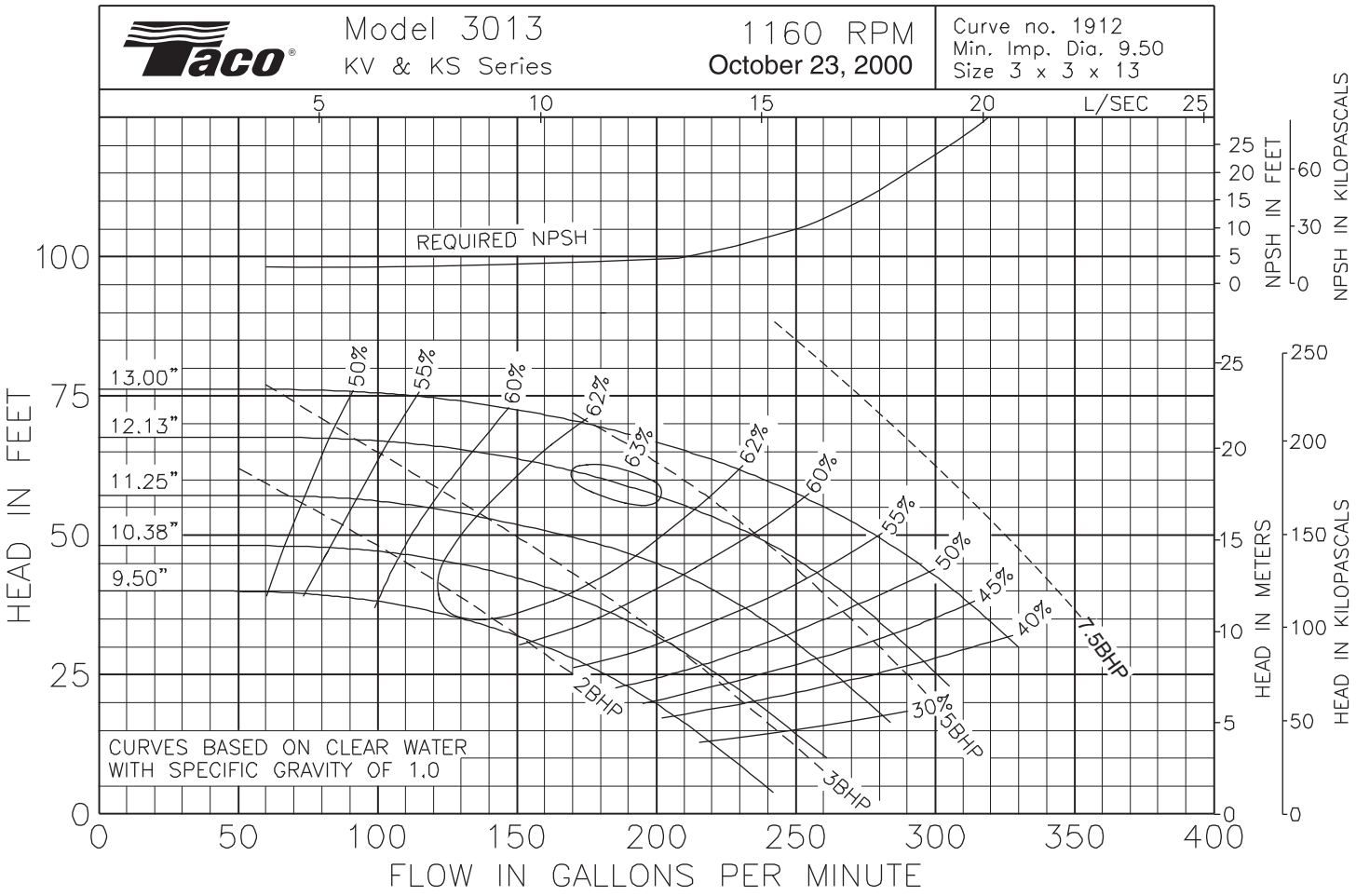

Comments: _____

Do it Once. Do it Right.®

TACO, INC., 1160 Cranston Street, Cranston, RI 02920 Telephone: (401) 942-8000 FAX: (401) 942-2360.
TACO (Canada), Ltd., 8450 Lawson Road, Unit #3, Milton, Ontario L9T 0J8. Telephone: 905/564-9422. FAX: 905/564-9436.
Visit our web site at: http://www.taco-hvac.com

Printed in USA
Copyright 2010
TACO, Inc.