Submittal Data Information

101-9.9

LoadMatch® Circulator

Effective: January 10, 2008

Supersedes: November 1, 2002

Job: _____ Engineer: _____ Contractor: _____ Rep: _____

ITEM NO.	MODEL NO.	

Features

- Integral Flow Check (IFC®)
  - Prevents gravity flow
  - Eliminates separate in-line flow check
  - Reduces installed cost, easy to service
  - Improved performance vs. In-line flow checks
- Exclusive ACB — Anti-Condensate Baffle - protects motor windings against condensate build-up
- Unique replaceable cartridge-Field serviceable
- Unmatched reliability-Maintenance free
- Quiet, efficient operation
- Direct drive-Low power consumption
- Self lubricating, No mechanical seal
- Standard high capacity output-Compact design

Mounting Positions

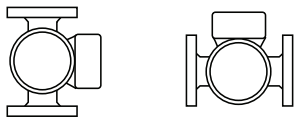

Standard Optional

Flange Orientation

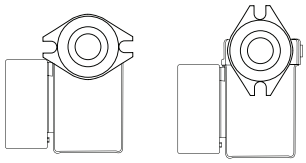

Standard L1111 only

c UL us LISTED

FOR INDOOR USE ONLY

Materials of Construction

Casing (Volute):	Cast Iron or Bronze
Integral Flow Check:	
Body, Plunger	Acetal
O-ring Seals	EPDM
Spring	Stainless Steel
Stator Housing:	Steel or Aluminum
Cartridge:	Stainless Steel
Impeller:	Non-Metallic
Shaft:	Ceramic
Bearings:	Carbon
O-Ring & Gaskets:	EPDM

Performance Data

Minimum Fluid Temperature:
32°F (0°C)

Maximum Fluid Temperature:
230°F (110°C) Cast Iron

220°F (104°C) Bronze

Maximum Working Pressure:
200 psi

Connection Sizes:
3/4", 1", 1-1/4", 1-1/2" Flanged

1/2", 3/4" Sweat

Electrical Data

		3250RPM, 60Hz, Single Phase			2750RPM, 50Hz, Single Phase	
Model	**HP**	**115V, Amps**	**208-230V, Amps**	**277V, Amps**	**100/110V, Amps**	**220V, Amps**
BRONZE						
L0205	1/40	0.45	0.32	0.21	0.45	0.32
L0410	1/40	0.55	0.37	0.19	0.55	0.46
L0515	1/25	0.84	0.51	0.33	0.85	0.52
CAST IRON						
L0205	1/40	0.44	0.32	0.21	0.48	0.40
L0410	1/40	0.52	0.36	0.22	0.50	0.39
L0609	1/35	0.52	0.42	0.21	0.52	0.42
L0710	1/25	0.71	0.42	0.29	0.71	0.50
L0515	1/25	0.79	0.46	0.31	0.79	0.50
L0435	1/8	1.40	0.70	0.57	1.60	0.72
L1111	1/8	1.10	0.55	0.50	1.60	0.77
L1130	1/8	1.90	0.90	0.79	1.76	0.80
L1614	1/8	1.57	0.70	0.63	1.70	0.75
L1034	1/6	2.00	1.00	0.90	2.00	1.00
L1121	1/8	1.45	0.73	0.64	1.80	0.82

Circulator Dimensions & Weights

		A		B		C		D		E		F		Ship Wt.	
Model	Connection	in.	mm	in.	mm	in.	mm	in.	mm	in.	mm	in.	mm	lbs.	Kg
BRONZE															
L0205	1/2", 3/4" swt.	6	152	4-7/8	124	2-3/16	56	2-15/16	75	3-5/16	84	4-3/8	111	6	2.7
L0410	1/2", 3/4" swt.	6	152	4-7/8	124	2-3/16	56	2-15/16	75	3-5/16	84	4-3/8	111	6	2.7
L0515	3/4" swt.	6-1/2	165	4-9/16	116	3-3/16	81	2-15/16	75	4-11/16	119	6-3/8	162	9	4.0
CAST IRON															
L0205	Flanged	6-1/4	159	4-3/8	111	3-3/16	81	2-15/16	75	5	127	6-3/8	162	7	3.2
L0410	Flanged	6-1/4	159	4-3/8	111	3-3/16	81	2-15/16	75	5	127	6-3/8	162	7	3.2
L0609	Flanged	5-5/8	143	4	102	3-3/16	81	2-15/16	75	5	127	6-3/8	162	8	3.6
L0710	Flanged	5-7/8	149	4-1/2	114	3-3/16	81	2-15/16	75	5	127	6-3/8	162	9	4.0
L0515	Flanged	5-15/16	151	4-1/2	114	3-3/16	81	2-15/16	75	5	127	6-3/8	162	9	4.0
L0435	Flanged	7	178	5-11/16	144	3-3/16	81	3-3/8	86	5-1/2	140	6-3/8	162	9.5	4.3
L1111	Flanged	7-1/4	184	5-5/16	135	3-3/16	81	3-5/16	84	5-3/8	137	6-3/8	162	10	4.5
L1130	Flanged	7-1/2	191	6-1/8	156	3	76	3-5/16	84	5-1/2	140	6-1/2	165	12	5.5
L1614	Flanged	8-1/16	205	6-3/8	162	4-1/4	108	3-5/16	84	6	152	8-1/2	216	14	6.3
L1034	Flanged	7-1/2	191	6-3/8	162	3	76	3-7/8	98	6	152	6-1/2	165	12.5	5.7
L1121	Flanged	7-1/4	184	5-3/4	146	3-1/4	83	3-5/16	84	5-1/2	140	6-1/2	165	13	5.9

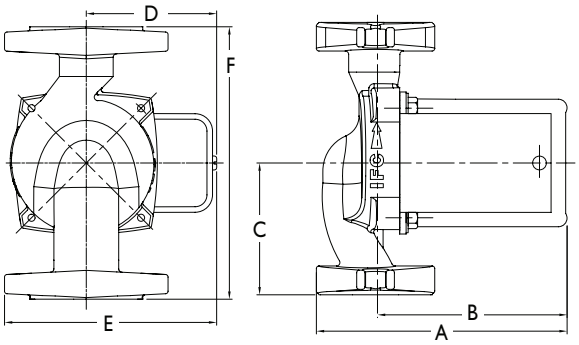

Flanged Models

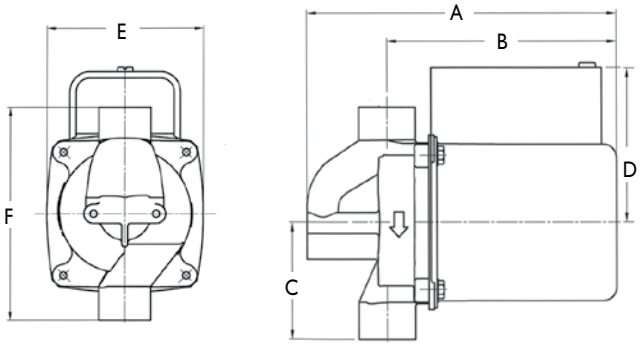

Sweat Connection Models

Do it Once. Do it Right.®

TACO INC., 1160 Cranston Street, Cranston, RI 02920 Telephone: (401) 942-8000 Fax: 942-2360
TACO (Canada), Ltd., 6180 Ordan Drive, Mississauga, Ontario L5T 2B3 Telephone: (905) 564-9422 Fax: (905) 564-9436
Visit our website at: www.taco-hvac.com

Printed in USA
Copyright 2008
TACO, Inc.