Submittal Data Information

101-162

HF 5120 Series Lead-Free Mixing Valve

Supersedes: New

Effective: August 22, 2013

Job: _____ Engineer: _____ Contractor: _____ Rep: _____

ITEM NO.	MODEL NO.	

Features

≤ .25% lead

ASSE 1017 Listed

Ideal for Domestic Water Distribution Points

Suitable for use in Potable Water

Delivers Stable Mixed Water Temperature

Extended Mix Temperature Range of 85-176°F (29-80°C)

Tamper-Resistant Temperature Adjustment

Union Sweat Connections

Low Headloss

Outlet Temperature Strip

Performance

CV: 4.1
Max. Flow: 27.2 gpm (100 L/Min)
NOTE: Flow should never exceed standards for pipe size.

Min. Flow: 2.5 gpm (9.5 L/Min)

Hot Supply Temperature: 120-180˚F (49-82˚C)

Cold Supply Temperature: 39-80°F (5-27°C)

Max. Inlet Pressure: 230 psi (15.85 Bar)

Max. Variation in Supply Pressure: 20%

Min. Temperature Differential Between Hot Supply and Mixed: 27°F (15˚C)

Outlet Temperature Range: 85-175 F (29-80˚C)
Factory set to: 115-120˚F (41-45˚C)

Accuracy of Outlet

Temperature: ± 3˚F

Materials

Body: Brass ≤ .25% lead Brass

Internal Components:
≤ .25% lead Brass
Noryl GFN2

Seals: Viton

Spring: Stainless Steel

Piston: Polysulfone

Fittings: Varies (Brass, CPVC, Copper)

Gaskets: EPDM

Approvals

ASSE 1017
cUPC Listed
CSAB125.3

Application

This versatile NSF 61 ASSE 1017 mixing valve provides the ultimate performance for heating or domestic hot water installations where higher flow rates are required. The High Flow 5120 Series ASSE 1017 certification allows for domestic hot water storage at temperatures high enough to increase the effective storage capacity of a water heater, kill harmful bacteria and still be delivered at a safe 120˚F or less. The High Flow Series is designed for installations where the required flow rates are beyond the specifications of the standard 5120 or 5000 series mixing valves. The valves unique design and advanced thermostatic element ensures a stable mixed water temperature throughout the extended 85˚-176˚F range.

Low Temperature or Radiant Installation

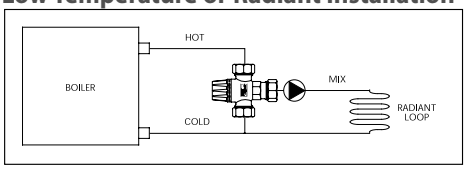

Typical Domestic Water Installation

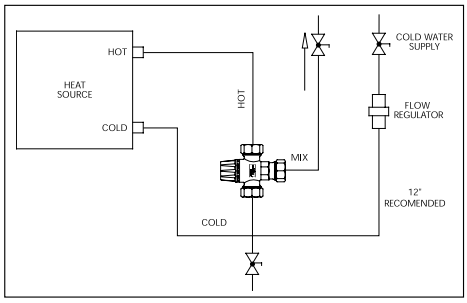

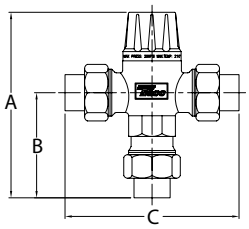

HF 5120 Series Mixing Valve Dimensions

Taco Model	Description	A Height		B Lower Height		C Width	
		In.	mm	In.	mm	In.	mm
5124-HF-C1	1" UNION SWEAT	5.4	137.2	3.3	83.8	6.1	154.9
5125-HF-C1	1 1/4" UNION SWEAT	5.7	144.8	3.6	91.4	6.6	167.6

Dimensions for reference only

Do it Once. Do it Right.®

TACO INC., 1160 Cranston Street, Cranston, RI 02920 Telephone: (401) 942-8000 Fax: 942-2360
TACO (Canada), Ltd., 6180 Ordan Drive, Mississauga, Ontario L5T 2B3 Telephone: (905) 564-9422 Fax: (905) 564-9436

Printed in USA
Copyright 2014
TACO, Inc.