Submittal Data Information
LOFlo™ Mixing Block

101-142

EFFECTIVE: December 1, 2012 SUPERSEDES: March 30, 2010

JOB _____ ENGINEER _____ CONTRACTOR _____ REP. _____

ITEM NO.	MODEL NO.	

Features

- All-in-one injection circulator, zone circulator and common bridge piping
- Only 4 piping connections
- Greatly reduces installation time
- Substantial space savings
- Maintenance free, wet rotor injection and zone circulators
- Replaceable cartridge
- Integral flow check
- Variable speed drive injection and optional zone circulator
- Choose from a variety of sizes and capacities for the injection and zone circulator

Electrical Data

MODEL	HP	3250 RPM, 60 Hz Single Phase	2750 RPM, 50 Hz Single Phase
		115 V, AMPS	100/110 V, AMPS
L0410	1/40	0.52	0.50
L0609	1/35	0.52	0.52
L0710	1/25	0.71	0.71
L0515	1/25	0.79	0.79
L0435	1/8	1.40	1.60
L1111	1/8	1.10	1.60
L1130	1/8	1.90	1.76
L1034	1/6	2.00	2.00
L1121	1/8	1.45	1.80

Performance Data

Minimum Fluid Temperature: 32°F (0°C)
Maximum Fluid Temperature: 230°F (110°C) Cast Iron
Maximum Working Pressure: 200 psi
Connection Sizes: ¾", 1", 1¼", 1½" Flanged

Materials of Construction

Casing (Volute): Cast Iron
Integral Flow Check:
Body Plunger . . . Acetal
O-ring Seals . . . . EPDM
Spring . . . . . Stainless Steel
Stator Housing: Steel or Aluminum
Cartridge: Stainless Steel
Impeller: Non-Metallic
Shaft: Ceramic
Bearings: Carbon
O-Ring & Gaskets: EPDM

Dimensional and Weight Data

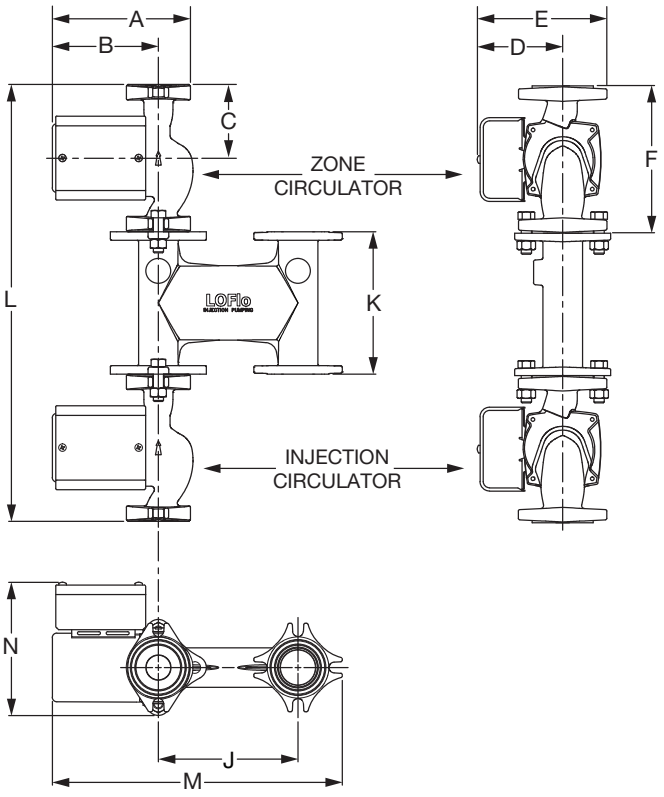

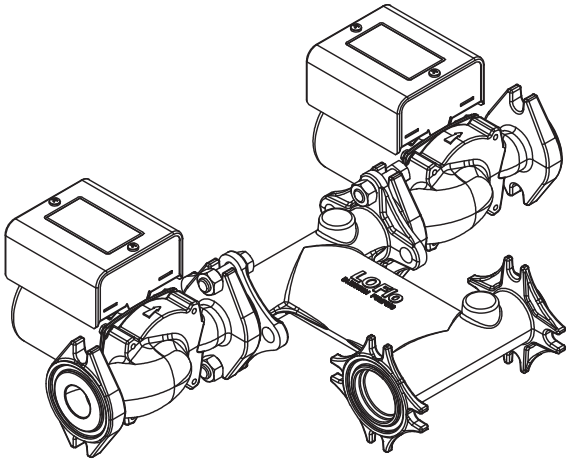

See Dimension and Weight Table on following pages.

Dimensional and Weight Data

INJECTION CIRCULATOR (Variable Speed)	ZONE CIRCULATOR (Variable Speed)	LOFlo™ PART NUMBER	A in (mm)	B in (mm)	C in (mm)	D in (mm)	E in (mm)	F in (mm)
L0410D	L0410V	LMB0410D-0410V-Y	6¼ (159)	6¼ (159)	3³⁄₁₆ (81)	2¹⁵⁄₁₆ (75)	5 (127)	6⅜ (162)
	L0609V	LMB0410D-0609V-Y	5⅝ (143)	4 (102)	3³⁄₁₆ (81)	2¹⁵⁄₁₆ (75)	5 (127)	6⅜ (162)
	L0710V	LMB0410D-0710V-Y	5⅞ (149)	4½ (114)	3³⁄₁₆ (81)	2¹⁵⁄₁₆ (75)	5 (127)	6⅜ (162)
	L0515V	LMB0410D-0515V-Y	5¹⁵⁄₁₆ (151)	4½ (114)	3³⁄₁₆ (81)	2¹⁵⁄₁₆ (75)	5 (127)	6⅜ (162)
	L1111V	LMB0410D-1111V-Y	7¼ (184)	5⁵⁄₁₆ (135)	3³⁄₁₆ (81)	3⁵⁄₁₆ (84)	5⅜ (137)	6⅜ (162)
	L0435V	LMB0410D-0435V-Y	7 (178)	5¹¹⁄₁₆ (144)	3³⁄₁₆ (81)	3⅜ (86)	5½ (140)	6⅜ (162)
	L1121V	LMB0410D-1121V-Y	7¼ (184)	5¾ (146)	3¼ (83)	3⁵⁄₁₆ (84)	5½ (140)	6½ (165)
	L1130V	LMB0410D-1130V-Y	7½ (191)	6⅛ (156)	3 (76)	3⁵⁄₁₆ (84)	5½ (140)	6½ (165)
	L1034V	LMB0410D-1034V-Y	7½ (191)	6⅜ (162)	3 (76)	3⅞ (98)	6 (152)	6½ (165)
L0609D	L0609V	LMB0609D-0609V-Y	5⅝ (143)	4 (102)	3³⁄₁₆ (81)	2¹⁵⁄₁₆ (75)	5 (127)	6⅜ (162)
	L0710V	LMB0609D-0710V-Y	5⅞ (149)	4½ (114)	3³⁄₁₆ (81)	2¹⁵⁄₁₆ (75)	5 (127)	6⅜ (162)
	L0515V	LMB0609D-0515V-Y	5¹⁵⁄₁₆ (151)	4½ (114)	3³⁄₁₆ (81)	2¹⁵⁄₁₆ (75)	5 (127)	6⅜ (162)
	L1111V	LMB0609D-1111V-Y	7¼ (184)	5⁵⁄₁₆ (135)	3³⁄₁₆ (81)	3⁵⁄₁₆ (84)	5⅜ (137)	6⅜ (162)
	L0435V	LMB0609D-0435V-Y	7 (178)	5¹¹⁄₁₆ (144)	3³⁄₁₆ (81)	3⅜ (86)	5½ (140)	6⅜ (162)
	L1121V	LMB0609D-1121V-Y	7¼ (184)	5¾ (146)	3¼ (83)	3⁵⁄₁₆ (84)	5½ (140)	6½ (165)
	L1130V	LMB0609D-1130V-Y	7½ (191)	6⅛ (156)	3 (76)	3⁵⁄₁₆ (84)	5½ (140)	6½ (165)
	L1034V	LMB0609D-1034V-Y	7½ (191)	6⅜ (162)	3 (76)	3⅞ (98)	6 (152)	6½ (165)
L0710D	L0710V	LMB0710D-0710V-Y	5⅞ (149)	4½ (114)	3³⁄₁₆ (81)	2¹⁵⁄₁₆ (75)	5 (127)	6⅜ (162)
	L0515V	LMB0710D-0515V-Y	5¹⁵⁄₁₆ (151)	4½ (114)	3³⁄₁₆ (81)	2¹⁵⁄₁₆ (75)	5 (127)	6⅜ (162)
	L1111V	LMB0710D-1111V-Y	7¼ (184)	5⁵⁄₁₆ (135)	3³⁄₁₆ (81)	3⁵⁄₁₆ (84)	5⅜ (137)	6⅜ (162)
	L0435V	LMB0710D-0435V-Y	7 (178)	5¹¹⁄₁₆ (144)	3³⁄₁₆ (81)	3⅜ (86)	5½ (140)	6⅜ (162)
	L1121V	LMB0710D-1121V-Y	7¼ (184)	5¾ (146)	3¼ (83)	3⁵⁄₁₆ (84)	5½ (140)	6½ (165)
	L1130V	LMB0710D-1130V-Y	7½ (191)	6⅛ (156)	3 (76)	3⁵⁄₁₆ (84)	5½ (140)	6½ (165)
	L1034V	LMB0710D-1034V-Y	7½ (191)	6⅜ (162)	3 (76)	3⅞ (98)	6 (152)	6½ (165)
L0515D	L0515V	LMB0515D-0515V-Y	5¹⁵⁄₁₆ (151)	4½ (114)	3³⁄₁₆ (81)	2¹⁵⁄₁₆ (75)	5 (127)	6⅜ (162)
	L1111V	LMB0515D-1111V-Y	7¼ (184)	5⁵⁄₁₆ (135)	3³⁄₁₆ (81)	3⁵⁄₁₆ (84)	5⅜ (137)	6⅜ (162)
	L0435V	LMB0515D-0435V-Y	7 (178)	5¹¹⁄₁₆ (144)	3³⁄₁₆ (81)	3⅜ (86)	5½ (140)	6⅜ (162)
	L1121V	LMB0515D-1121V-Y	7¼ (184)	5¾ (146)	3¼ (83)	3⁵⁄₁₆ (84)	5½ (140)	6½ (165)
	L1130V	LMB0515D-1130V-Y	7½ (191)	6⅛ (156)	3 (76)	3⁵⁄₁₆ (84)	5½ (140)	6½ (165)
	L1034V	LMB0515D-1034V-Y	7½ (191)	6⅜ (162)	3 (76)	3⅞ (98)	6 (152)	6½ (165)
L1111D	L1111V	LMB1111D-1111V-Y	7¼ (184)	5⁵⁄₁₆ (135)	3³⁄₁₆ (81)	3⁵⁄₁₆ (84)	5⅜ (137)	6⅜ (162)
	L0435V	LMB1111D-0435V-Y	7 (178)	5¹¹⁄₁₆ (144)	3³⁄₁₆ (81)	3⅜ (86)	5½ (140)	6⅜ (162)
	L1121V	LMB1111D-1121V-Y	7¼ (184)	5¾ (146)	3¼ (83)	3⁵⁄₁₆ (84)	5½ (140)	6½ (165)
	L1130V	LMB1111D-1130V-Y	7½ (191)	6⅛ (156)	3 (76)	3⁵⁄₁₆ (84)	5½ (140)	6½ (165)
	L1034V	LMB1111D-1034V-Y	7½ (191)	6⅜ (162)	3 (76)	3⅞ (98)	6 (152)	6½ (165)
L0435D	L0435V	LMB0435D-0435V-Y	7 (178)	5¹¹⁄₁₆ (144)	3³⁄₁₆ (81)	3⅜ (86)	5½ (140)	6⅜ (162)
	L1121V	LMB0435D-1121V-Y	7¼ (184)	5¾ (146)	3¼ (83)	3⁵⁄₁₆ (84)	5½ (140)	6½ (165)
	L1130V	LMB0435D-1130V-Y	7½ (191)	6⅛ (156)	3 (76)	3⁵⁄₁₆ (84)	5½ (140)	6½ (165)
	L1034V	LMB0435D-1034V-Y	7½ (191)	6⅜ (162)	3 (76)	3⅞ (98)	6 (152)	6½ (165)
L1121D	L1121V	LMB1121D-1121V-Y	7¼ (184)	5¾ (146)	3¼ (83)	3⁵⁄₁₆ (84)	5½ (140)	6½ (165)
	L1130V	LMB1121D-1130V-Y	7½ (191)	6⅛ (156)	3 (76)	3⁵⁄₁₆ (84)	5½ (140)	6½ (165)
	L1034V	LMB1121D-1034V-Y	7½ (191)	6⅜ (162)	3 (76)	3⅞ (98)	6 (152)	6½ (165)
L1130D	L1130V	LMB1130D-1130V-Y	7½ (191)	6⅛ (156)	3 (76)	3⁵⁄₁₆ (84)	5½ (140)	6½ (165)
	L1034V	LMB1130D-1034V-Y	7½ (191)	6⅜ (162)	3 (76)	3⅞ (98)	6 (152)	6½ (165)
L1034D	L1034V	LMB1034D-1034V-Y	7½ (191)	6⅜ (162)	3 (76)	3⅞ (98)	6 (152)	6½ (165)

Dimensional and Weight Data (continued)

INJECTION CIRCULATOR (Variable Speed)	ZONE CIRCULATOR (Variable Speed)	LOFlo™ PART NUMBER	J in (mm)	K in (mm)	L in (mm)	M in (mm)	N in (mm)	SHIP WEIGHT lbs (Kg)
L0410D	L0410V	LMB0410D-0410V-Y	6 (152)	6⅛ (156)	18⅞ (479)	14¼ (362)	5 (127)	19 (8.6)
	L0609V	LMB0410D-0609V-Y	6 (152)	6⅛ (156)	18⅞ (479)	12 (305)	5 (127)	20 (9.1)
	L0710V	LMB0410D-0710V-Y	6 (152)	6⅛ (156)	18⅞ (479)	12½ (318)	5 (127)	21 (9.5)
	L0515V	LMB0410D-0515V-Y	6 (152)	6⅛ (156)	18⅞ (479)	12½ (318)	5 (127)	21 (9.5)
	L1111V	LMB0410D-1111V-Y	6 (152)	6⅛ (156)	18⅞ (479)	13 5/16 (338)	5⅜ (137)	22 (10.0)
	L0435V	LMB0410D-0435V-Y	6 (152)	6⅛ (156)	18⅞ (479)	13 11/16 (348)	5 7/16 (138)	22 (10.0)
	L1121V	LMB0410D-1121V-Y	6 (152)	6⅛ (156)	19 (483)	13¾ (349)	5⅜ (137)	25 (11.3)
	L1130V	LMB0410D-1130V-Y	6 (152)	6⅛ (156)	19 (483)	14⅛ (359)	5⅜ (137)	24 (10.9)
	L1034V	LMB0410D-1034V-Y	6 (152)	6⅛ (156)	19 (483)	14⅜ (365)	5 15/16 (151)	25 (11.3)
L0609D	L0609V	LMB0609D-0609V-Y	6 (152)	6⅛ (156)	18⅞ (479)	12 (305)	5 (127)	21 (9.5)
	L0710V	LMB0609D-0710V-Y	6 (152)	6⅛ (156)	18⅞ (479)	12½ (318)	5 (127)	22 (10.0)
	L0515V	LMB0609D-0515V-Y	6 (152)	6⅛ (156)	18⅞ (479)	12½ (318)	5 (127)	22 (10.0)
	L1111V	LMB0609D-1111V-Y	6 (152)	6⅛ (156)	18⅞ (479)	13 5/16 (338)	5⅜ (137)	23 (10.4)
	L0435V	LMB0609D-0435V-Y	6 (152)	6⅛ (156)	18⅞ (479)	13 11/16 (348)	5 7/16 (138)	23 (10.4)
	L1121V	LMB0609D-1121V-Y	6 (152)	6⅛ (156)	19 (483)	13¾ (349)	5⅜ (137)	26 (11.8)
	L1130V	LMB0609D-1130V-Y	6 (152)	6⅛ (156)	19 (483)	14⅛ (359)	5⅜ (137)	25 (11.3)
	L1034V	LMB0609D-1034V-Y	6 (152)	6⅛ (156)	19 (483)	14⅜ (365)	5 15/16 (151)	26 (11.8)
L0710D	L0710V	LMB0710D-0710V-Y	6 (152)	6⅛ (156)	18⅞ (479)	12½ (318)	5 (127)	23 (10.4)
	L0515V	LMB0710D-0515V-Y	6 (152)	6⅛ (156)	18⅞ (479)	12½ (318)	5 (127)	23 (10.4)
	L1111V	LMB0710D-1111V-Y	6 (152)	6⅛ (156)	18⅞ (479)	13 5/16 (338)	5⅜ (137)	24 (10.9)
	L0435V	LMB0710D-0435V-Y	6 (152)	6⅛ (156)	18⅞ (479)	13 11/16 (348)	5 7/16 (138)	24 (10.9)
	L1121V	LMB0710D-1121V-Y	6 (152)	6⅛ (156)	19 (483)	13¾ (349)	5⅜ (137)	27 (12.2)
	L1130V	LMB0710D-1130V-Y	6 (152)	6⅛ (156)	19 (483)	14⅛ (359)	5⅜ (137)	26 (11.8)
	L1034V	LMB0710D-1034V-Y	6 (152)	6⅛ (156)	19 (483)	14⅜ (365)	5 15/16 (151)	27 (12.2)
L0515D	L0515V	LMB0515D-0515V-Y	6 (152)	6⅛ (156)	18⅞ (479)	12½ (318)	5 (127)	23 (10.4)
	L1111V	LMB0515D-1111V-Y	6 (152)	6⅛ (156)	18⅞ (479)	13 5/16 (338)	5⅜ (137)	24 (10.9)
	L0435V	LMB0515D-0435V-Y	6 (152)	6⅛ (156)	18⅞ (479)	13 11/16 (348)	5 7/16 (138)	24 (10.9)
	L1121V	LMB0515D-1121V-Y	6 (152)	6⅛ (156)	19 (483)	13¾ (349)	5⅜ (137)	27 (12.2)
	L1130V	LMB0515D-1130V-Y	6 (152)	6⅛ (156)	19 (483)	14⅛ (359)	5⅜ (137)	26 (11.8)
	L1034V	LMB0515D-1034V-Y	6 (152)	6⅛ (156)	19 (483)	14⅜ (365)	5 15/16 (151)	27 (12.2)
L1111D	L1111V	LMB1111D-1111V-Y	6 (152)	6⅛ (156)	18⅞ (479)	13 5/16 (338)	5⅜ (137)	25 (11.3)
	L0435V	LMB1111D-0435V-Y	6 (152)	6⅛ (156)	18⅞ (479)	13 11/16 (348)	5 7/16 (138)	25 (11.3)
	L1121V	LMB1111D-1121V-Y	6 (152)	6⅛ (156)	19 (483)	13¾ (349)	5⅜ (137)	28 (12.7)
	L1130V	LMB1111D-1130V-Y	6 (152)	6⅛ (156)	19 (483)	14⅛ (359)	5⅜ (137)	27 (12.2)
	L1034V	LMB1111D-1034V-Y	6 (152)	6⅛ (156)	19 (483)	14⅜ (365)	5 15/16 (151)	28 (12.7)
L0435D	L0435V	LMB0435D-0435V-Y	6 (152)	6⅛ (156)	18⅞ (479)	13 11/16 (348)	5 7/16 (138)	24 (10.9)
	L1121V	LMB0435D-1121V-Y	6 (152)	6⅛ (156)	19 (483)	13¾ (349)	5⅜ (137)	28 (12.7)
	L1130V	LMB0435D-1130V-Y	6 (152)	6⅛ (156)	19 (483)	14⅛ (359)	5⅜ (137)	27 (12.2)
	L1034V	LMB0435D-1034V-Y	6 (152)	6⅛ (156)	19 (483)	14⅜ (365)	5 15/16 (151)	27 (12.2)
L1121D	L1121V	LMB1121D-1121V-Y	6 (152)	6⅛ (156)	19⅛ (486)	13¾ (349)	5⅜ (137)	31 (14.1)
	L1130V	LMB1121D-1130V-Y	6 (152)	6⅛ (156)	19⅛ (486)	14⅛ (359)	5⅜ (137)	30 (13.6)
	L1034V	LMB1121D-1034V-Y	6 (152)	6⅛ (156)	19⅛ (486)	14⅜ (365)	5 15/16 (151)	31 (14.1)
L1130D	L1130V	LMB1130D-1130V-Y	6 (152)	6⅛ (156)	19⅛ (486)	14⅛ (359)	5⅜ (137)	29 (13.2)
	L1034V	LMB1130D-1034V-Y	6 (152)	6⅛ (156)	19⅛ (486)	14⅜ (365)	5 15/16 (151)	30 (13.6)
L1034D	L1034V	LMB1034D-1034V-Y	6 (152)	6⅛ (156)	19⅛ (486)	14⅜ (365)	5 15/16 (151)	30 (13.6)

COMFORT MADE EASY®

TACO, INC., 1160 Cranston Street, Cranston, RI 02920 Telephone: (401) 942-8000 FAX: (401) 942-2360.
TACO (Canada), Ltd., 8450 Lawson Road, Unit #3, Milton, Ontario L9T 0J8. Telephone: 905/564-9422. FAX: 905/564-9436.

Visit our web site at: http://www.taco-hvac.com

Copyright 2012
TACO, Inc.