Submittal Data Information

101-126

LoadMatch® Thermostats

EFFECTIVE: September 1, 2011 SUPERSEDES: May 16, 2007

JOB _____ ENGINEER _____ CONTRACTOR _____ REP. _____

ITEM NO.	MODEL NO.	

Features:

- LoadMatch® ready
- All-in-one control
- Pre-Programmed
- Familiar thermostat aesthetics & interface
- Stand alone and network versions
- Large backlit display with clear function buttons
- Hinged design with removable terminal blocks for easy installation

Specifications:

- Power requirements: 19-30 VAC, 50/60 Hz
- Resolution ± 0.2°F(± 0.1°CF)
- Control accuracy: ± 0.9°F(± 0.5°C) @ 21°C
- Contact output rating: 30 VAC, 1A, 3A in-rush
- Wire gauge: 18AWG – 24 AWG
- Ship weight: 0.75 lb. (0.34 kg)

Dimensions:

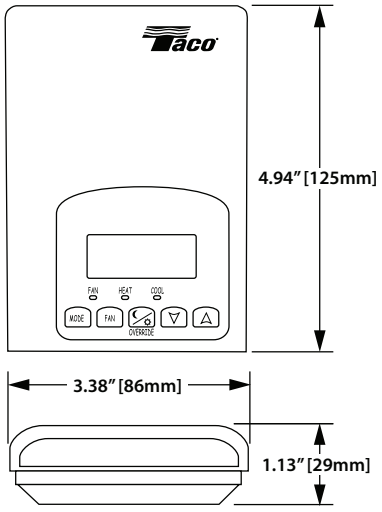

Agency Approvals / Standards:

c UL us LISTED

CE

LonMark®

FCC Class A Device

BACnet

LoadMatch® Fan Coil Thermostats:

MODEL	SUFFIX[1]	APPLICATION[2]	RH SENSOR	MARKET[3]
VT7300C5021	B or E	3 PT. FLOATING & ON/OFF	NO	COMMERCIAL / INSTITUTIONAL
VT7350C5021			YES	
VT7305C5021			NO	HOTELS / LODGING
VT7355C5021			YES	
VT7300F5021		ANALOG 0-10 VDC	NO	COMMERCIAL / INSTITUTIONAL
VT7350F5021			YES	
VT7305F5021			NO	HOTELS / LODGING
VT7355F5021			YES	

Note 1: **B** for BACnet, **E** for Echelon protocol or **No Suffix** for Non-Communicating.
Note 2: 3 Pt. Floating for Modulating Valve Control.
Note 3: Commercial / Institutional models include a night setback override button.

LoadMatch® Heat Pump Thermostats:

MODEL	SUFFIX[1]	APPLICATION	MARKET
VT7600H5021	B or E	3 HEATING / 2 COOLING STAGES	NON-PROGRAMMABLE
VT7652H5021			7-DAY PROGRAMMABLE

Note 1: **B** for BACnet, **E** for Echelon protocol or **No Suffix** for Non-Communicating.

Optional Sensors:

MODEL	DESCRIPTION
S1010E5021	CHAGE OVER SENSOR, STRAP-ON TYPE
S3010W5021	REMOTE WALL MOUNTED ROOM SENSOR
S3020W5021	REMOTE WALL MOUNTED ROOM SENSOR WITH OVERRIDE KEY & OCCUPANCY LED

Typical Fan Coil Application:

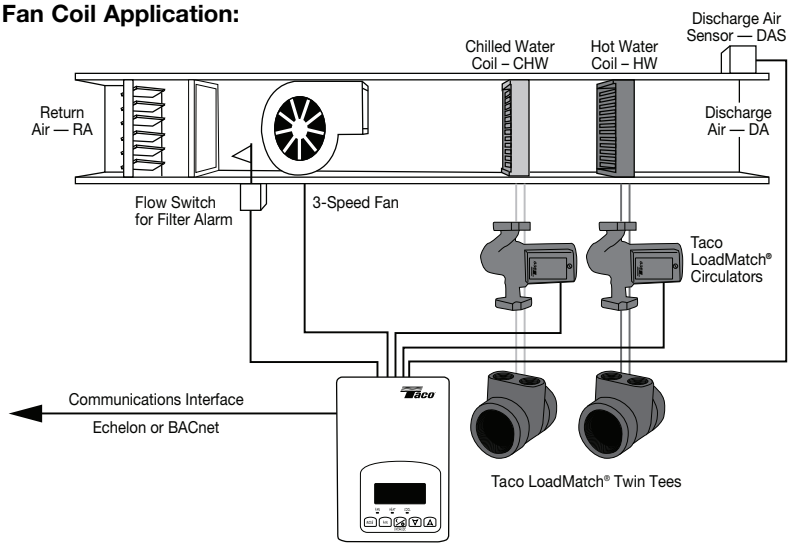

COMFORT MADE EASY®

TACO, INC., 1160 Cranston Street, Cranston, RI 02920 Telephone: (401) 942-8000 FAX: (401) 942-2360.
TACO (Canada), Ltd., 8450 Lawson Road, Unit #3, Milton, Ontario L9T 0J8. Telephone: 905/564-9422. FAX: 905/564-9436.
Visit our web site at: http://www.taco-hvac.com

Printed in USA
Copyright 2011
TACO, Inc.